MAHAVIR CANCER SANSTHAN & RESEARCH CENTRE (MCSRC)
PATNA, BIHAR

NOTICE INVITING QUOTATION (NIQ)

For Electrical, Fire Safety, Turnkey Civil & Interior, Furniture, Plumbing, HVAC, Shielding and Civil Modification Works for HE LINAC

NIQ Reference No.	MCS/ENGG./ 2026-27/ 1125
Date of Issue	24 / 11 /2026
Last date & time of submission	15 Working days from date of issue of Tender.

Mahavir Cancer Sansthan (MCS), Patna invites sealed quotations from eligible and experienced agencies/contractors for execution of the HE LINAC related works described in this NIQ and its Annexure-I (Bill of Quantities). The work shall be executed as per the specifications, approved drawings, site requirements and directions of the Engineer-in-Charge (EIC).

Name of Work
Electrical, Fire Safety, Turnkey Civil & Interior, Furniture, Plumbing, HVAC, Shielding and Civil Modification Works for HE LINAC at MCSRC, Patna.

1. Important Dates and Details

Tender document availability	From 24 / 11 /2026 to 11/ 12/2026 at .
Submission mode	Sealed quotation superscribed "NIQ for HE LINAC – Electrical & Turnkey Works".
Submission address	Tender Box kept in Room No.03 A-Block , Mahavir Cancer Sansthan,Phulwarisharif, Patna, Bihar.
Quotation validity	30 days from the last date of submission.
Site visit / clarification	Engineering Department, MCS, Patna .

2. Scope of Work

The scope includes the following components, in accordance with the detailed item descriptions, units and quantities in Annexure-I:

The Electrical, civil & interior works detailed drawing has been attached.

- Electrical works: LT panels, UPS output panel, distribution boards, MCBs, LT cables, cable termination, submains, point wiring, sockets, lighting, data/voice/network, copper plate earthing, emergency switches and GI cable tray.
- Fire safety works: fire alarm panel, smoke detectors, manual call point, hooters/sounders, armoured cable and fire extinguishers.
- Turnkey civil and interior works: pit and trench construction, PCC backfilling, baseframe filling, wall panelling, vinyl flooring, painting, rodent treatment, false ceiling and trench covers.
- Furniture works: chairs, cupboards, overhead storage, name boards, workstation tables and bunker/console wooden doors.
- Plumbing works: chiller platform, chiller inlet/outlet equipment and accessories, insulated copper piping, core cutting and hole repair.
- HVAC works: ducting, HVAC units, manpower, materials, accessories fixation, air-quality testing and modification.
- Shielding and civil modification works in the bunker.

Annexure-I shall form an integral part of this NIQ and the subsequent Work Order/Agreement.

3. Documents to be Submitted by the Bidder

- PAN and GST registration certificate, as applicable.
- Firm/company registration or constitution documents.
- Details of similar works executed, supported by work orders and completion certificates.
- Authorization / power of attorney of the signatory, wherever applicable.
- Bank account details and cancelled cheque.
- Undertaking confirming that the bidder has examined the BOQ, tender conditions and site conditions.

4. Instructions to Bidders

1. Rates shall be quoted item-wise against each BOQ item. The bidder shall not alter the item description, unit or quantity. Any deviation shall be separately stated.
2. Rates shall be quoted in Indian Rupees in figures and words. GST and other applicable taxes/levies shall be shown separately, and the bidder shall clearly state whether the rates are inclusive or exclusive of taxes.
3. Quoted rates shall include labour, materials, tools, tackles, transportation, loading/unloading, installation, testing, commissioning, consumables and incidental expenses necessary for completion, unless specifically excluded and accepted in writing by MCSRC.
4. The bidder shall inspect the site and satisfy itself regarding access, existing services, dimensions and working conditions before quoting. No claim arising from lack of site inspection shall ordinarily be entertained.
5. Any ambiguity or discrepancy in the BOQ shall be referred to MCSRC in writing before submission. Written clarification issued by MCSRC shall prevail.
6. Conditional, incomplete or unsigned quotations may be rejected. Corrections/overwriting shall be authenticated by the authorized signatory.
7. Canvassing in any form shall make the quotation liable for rejection.
8. MCSRC reserves the right to accept or reject any or all quotations, wholly or partly, or cancel the NIQ process without assigning reasons.

5. Technical Conditions and Execution

- All materials shall be new, unused, of approved make and conform to the specifications stated in the BOQ and applicable standards/statutory requirements.
- Make lists, catalogues, technical data sheets, samples, drawings, cable routes, panel schedules, earthing details and method statements shall be submitted for approval wherever required by the EIC before procurement/execution.
- The contractor shall coordinate electrical, civil, HVAC, plumbing, shielding and fire-safety activities with MCSRC and the HE LINAC equipment supplier/installation team.
- Work shall be carried out without disruption to hospital operations. Shutdown or interruption of existing services shall be undertaken only with prior written permission of MCSRC.
- The contractor shall provide proper barricading, housekeeping and safety measures and comply with applicable labour and safety laws. Damage to existing property/services caused by the contractor shall be made good at its own cost.
- All installations shall be tested before commissioning. Test reports, warranties, operation and maintenance manuals and as-built drawings shall be handed over on completion.
- Debris and surplus materials shall be removed and the work area handed over clean and safe.
- Defect Liability Period will be 1 Year from the date of completion of the entire electrical and civil works.

6. Measurement, Inspection and Acceptance

- Measurements shall be verified by the EIC/authorized representative of MCSRC. Payment shall be based on actual work executed and accepted, subject to the Work Order.
- Items shall be measured in the units specified in the BOQ. Extra items or deviations shall be undertaken only after prior written approval of the competent authority and approval of rates.
- MCSRC may inspect materials and workmanship at any stage. Defective materials/workmanship shall be replaced or rectified by the contractor at no additional cost.
- Completion shall be recognized only after successful testing, commissioning, rectification of observations and written acceptance by MCSRC.

7. Award of Work and General Conditions

- The work may be awarded to a bidder whose quotation is substantially responsive, technically acceptable and considered suitable by MCSRC. MCSRC may seek clarifications or negotiate rates wherever permissible.
- The successful bidder shall accept the Work Order and execute the agreement, if required, within the period stipulated by MCSRC.
- The contractor shall not assign or subcontract the work without prior written approval of MCSRC.
- The contractor shall comply with applicable statutory provisions relating to labour, wages, insurance, taxes, safety and environment.
- Any variation or extra item shall be executed only after prior written approval of the competent authority.
- The NIQ, accepted quotation, approved clarifications, BOQ and Work Order/agreement shall constitute the contract documents. The Work Order shall specify the order of precedence in case of inconsistency.

ANNEXURE-I: BILL OF QUANTITIES (BOQ)

Name of Work: Electrical, Fire Safety, Turnkey Civil & Interior, Furniture, Plumbing, HVAC, Shielding and Civil Modification Works for HE LINAC.

The bidder shall fill in the Rate and Amount columns. Item descriptions, units and quantities are reproduced from the draft BOQ supplied for preparation of this NIQ.

Section	Sr. No.	Description of Item / Work	Unit	Qty	Rate (₹)	Amount (₹)
A – ELECTRICAL WORKS	**1**	**MAIN DISTRIBUTION LT PANEL**				
A – ELECTRICAL WORKS	1	Supply, erection, testing and commissioning of a cubicle-type, floor-standing, dust- and vermin-proof Main Distribution Panel (MDP), fabricated from 16 SWG CRCA sheet steel with seven-tank pretreatment and powder-coated finish, compartmentalized and complete with necessary support clamps, mounting angles, frames and accessories as per site requirements. The panel shall comprise a 250A, TP, 25kA MCCB incomer with neutral link and adjustable overload, short-circuit and earth-fault protection; outgoing feeders comprising 1 No. 160A and 1 No. 125A, TPN, 25kA MCCBs, 3 Nos. 63A and 3 Nos. 40A, TPN, 25kA MCBs; and an aluminium main busbar system rated at 1.2 sq. mm per ampere and copper interconnecting busbars rated at 0.85 sq. mm per ampere, complete with all necessary internal connections, hardware and accessories	Nos	1		
A – ELECTRICAL WORKS	**2**	**UPS Output Panel Board**				
A – ELECTRICAL WORKS	2(a)	Supply, erection, testing and commissioning of a floor-standing, cubicle-type UPS Output Panel, dust- and vermin-proof, fabricated with a 14 SWG CRCA sheet enclosure and 16 SWG CRCA sheet doors, powder-coated finish, modular compartmentalized construction, and IP42 protection, complete with necessary support clamps, mounting angles, frames and accessories as per site requirements. The panel shall comprise a 250A, TP, 25kA MCCB incomer with neutral link, adjustable overload, short-circuit and earth-fault protection, and rotary handle mechanism; outgoing feeders comprising 2 Nos. 100A and 1 No. 63A, TPN, 25kA MCCBs, each provided with a rotary handle mechanism; aluminium main busbars rated at 1.2 sq. mm per ampere and copper interconnecting busbars rated at 0.85 sq. mm per ampere. Incoming and outgoing cable connections shall be provided through either top or bottom entry, complete with all necessary internal connections, hardware and accessories.	Nos	1		
A – ELECTRICAL WORKS	**3**	**DISTRIBUTION BOARDS**				
A – ELECTRICAL	**3**	**Supply, erection, testing and commissioning of the following MCB DB double-door type, IP42**				

Rupnarayan

WORKS		**powder-coated, comprising fixed flush with the wall. The cost of providing adaptor box above the DB shell shall also be included.**				
A – ELECTRICAL WORKS	3.1	Raw power PDB & LDBs (UPS Room, Treatment Room and control console) – 6 WAY 7 Segment MCB DB, all MCBs shall be of C curve type only meant for Raw Power application; I/C – 63 AMPS FP MCB – 1 No.; O/G – 63AMPS DP MCB – 3 Nos.; O/G – 16/20/25A SP MCB – 12 Nos.; including all interconnections and other accessories as required.	Nos	2		
A – ELECTRICAL WORKS	3.2	UPS DBs for treatment room and control console – 4 WAY 7 Segment MCB DB, all MCBs shall be of C curve type only meant for UPS Power application; I/C – 63 AMPS FP MCB – 1 No.; O/G – 63AMPS DP MCB – 3 Nos.; O/G – 16/20/25A SP MCB – 12 Nos.; including all interconnections and other accessories as required.	Nos	1		
A – ELECTRICAL WORKS	3.3	UPS DBs (from customer centralised UPS to TPS Room) – 4 WAY 7 Segment MCB DB, all MCBs shall be of C curve type only meant for UPS Power application; I/C – 63 AMPS FP MCB – 1 No.; O/G – 63AMPS DP MCB – 3 Nos.; O/G – 16/20/25A SP MCB – 12 Nos.; including all interconnections and other accessories as required.	Nos	1		
A – ELECTRICAL WORKS	4	Supply, installation, testing and commissioning of 100A TPN MCB with waterproof enclosure including earthing and all other required accessories as per site conditions. For Chiller	Nos	1		
A – ELECTRICAL WORKS	5	Supply, installation, testing and commissioning of 32A 2P MCB with industrial socket with enclosure for Console power	Nos	1		
A – ELECTRICAL WORKS	**6**	**L.T. CABLES**				
A – ELECTRICAL WORKS	**6**	**Supply, laying, testing and commissioning of 1100V PVC insulated XLPE and sheathed armoured copper/aluminium conductor cables laid over MS supports/cable racks/fixing of walls including clamping the cable to the support in all approved manner as required.**				
A – ELECTRICAL WORKS	6.1	4R 120 sq.mm aluminium armoured cable from hospital panel to main LT panel of bunker or as per customer requirement	Mtr	50		
A – ELECTRICAL WORKS	6.2	4R 50 sq.mm Copper flexible cable UPS Incoming & Outgoing	Mtr	60		
A – ELECTRICAL WORKS	6.3	4R 50 sq.mm Copper flexible cable for UPS to GE Panel board	Mtr	150		
A – ELECTRICAL WORKS	6.4	4R 35 sq.mm Copper flexible cable for GE Panel board (CCP) to Modulator	Mtr	100		
A – ELECTRICAL WORKS	6.5	1C 50 sq.mm Copper flexible cable for additional Neutral and Neutral Earth for machine and UPS	Mtr	150		
A – ELECTRICAL WORKS	6.6	4C 16 sq.mm Copper Armoured Cable for UPS DB, Chiller & Duct A/C incoming	Mtr	200		
A – ELECTRICAL WORKS	**7**	**CABLE TERMINATION – Supply, erection, testing and commissioning for the following sizes of 1100V PVC insulated Cu/Al conductor cables including providing single compression**				

Rupnarayan

		type cable gland, copper sockets for copper cables, crimping lugs, insulation tape including gland.				
A – ELECTRICAL WORKS	7.1	4R 35 sq.mm Copper flexible cable	Nos	8		
A – ELECTRICAL WORKS	7.2	4R 50 sq.mm Copper flexible cable	Nos	8		
A – ELECTRICAL WORKS	7.3	1C 50 sq.mm Copper flexible cable	Nos	2		
A – ELECTRICAL WORKS	7.4	4C 16 sq.mm Copper Armoured Cable Duct A/C incoming	Nos	20		
A – ELECTRICAL WORKS	7.5	4C 120 sq.mm Aluminium Armoured Cable	RO	1		
A – ELECTRICAL WORKS	**8**	**SUBMAINS UPS & RAW POWER CIRCUITS**				
A – ELECTRICAL WORKS	8.1	Supply & laying of 2R 2.5 sq.mm + 1R 2.5 sq.mm PVC insulated FRLS multistrand copper wire with 25mm dia FRPVC conduit with all accessories as required as per site conditions (lighting circuit mains)	Mtr	250		
A – ELECTRICAL WORKS	8.2	Supply & laying of 2R 2.5 sq.mm + 1R 2.5 sq.mm PVC insulated FRLS multistrand copper wire with 25mm dia FRPVC conduit with all accessories as required as per site conditions (Raw Power Circuit)	Mtr	150		
A – ELECTRICAL WORKS	8.3	Supply & laying of 2R 2.5 sq.mm + 1R 2.5 sq.mm PVC insulated FRLS multistrand copper wire with 25mm dia FRPVC conduit with all accessories as required as per site conditions (UPS Circuit)	Mtr	250		
A – ELECTRICAL WORKS	8.4	Supply & laying of 2R 4 sq.mm + 1R 4 sq.mm PVC insulated FRLS multistrand copper wire with 25mm dia FRPVC conduit with all accessories as required as per site conditions (Split A/C / Power Socket Circuit)	Mtr	300		
A – ELECTRICAL WORKS	8.5	Supply & laying of 11 Run 1.5 sq.mm PVC insulated multistrand copper wire with 25mm dia PVC conduit with all accessories for door interlock and warning lamp wiring	Mtr	95		
A – ELECTRICAL WORKS	8.6	Supply & laying of 2 Run 1.5 sq.mm PVC insulated multistrand copper wire with 20mm dia PVC conduit with all accessories for Emergency push button wiring	Mtr	80		
A – ELECTRICAL WORKS	**9**	**POINT WIRING – Supply, installation, testing & commissioning of 3R 1.5 sq.mm PVC insulated FRLS copper wire with FRPVC conduit along with Modular 6A one-way switch with moulded front plate GI anodised enclosure and other associated accessories as required as per site.**				
A – ELECTRICAL WORKS	9.1	PRIMARY POINT	Pts	20		
A – ELECTRICAL WORKS	9.2	Secondary points	Pts	30		
A – ELECTRICAL WORKS	9.3	Dimmer light point with dimmer	Pts	4		
A –	**10**	**SOCKETS**				

Rajnarayan

ELECTRICAL WORKS						
A – ELECTRICAL WORKS	10.1	Supply, installation, testing & commissioning of 1 No. 6A socket and 1 No. 6A switch with moulded front plate GI anodised enclosure and other associated accessories as required as per site conditions. Control Console Room & TPS Room (UPS Power)	Nos	10		
A – ELECTRICAL WORKS	10.2	Supply, installation, testing & commissioning of 1 No. 6/16A universal switched socket with moulded front plate GI anodised enclosure and other associated accessories as per site conditions (with indicator)	Nos	25		
A – ELECTRICAL WORKS	**11**	**INSTALLATION OF LIGHT FITTINGS**				
A – ELECTRICAL WORKS	11.1	Supply, erection, testing and commissioning of 2' x 2' LED 40 watts recessed mounting fitting with all accessories and interconnecting with 3R 1.5 sq.mm PVC insulated FRLS copper wire. Make: Philips; other branded first-class companies preferred.	Nos	20		
A – ELECTRICAL WORKS	11.2	Supply, erection, testing and commissioning of LED 20 watts recessed mounting downlight fitting with all accessories and interconnecting with 3R 1.5 sq.mm PVC insulated FRLS copper wire. Make: Philips; other branded first-class companies preferred.	Nos	10		
A – ELECTRICAL WORKS	**12**	**DATA, VOICE & NETWORK**				
A – ELECTRICAL WORKS	12.1	Supply, laying, testing and commissioning of Cat-6 UTP Cable with FR PVC conduit and all accessories as required (Bunker, Console & TPS Room)	Mtrs	750		
A – ELECTRICAL WORKS	12.2	Supply, fixing, testing and commissioning of Information Outlet for Cat-6 UTP cable, quadra front plate with back box and all accessories as required (Bunker, Console)	Nos	20		
A – ELECTRICAL WORKS	12.3	Supply, fixing, testing and commissioning of Telephone Outlet front plate with back box and all accessories as required	Nos	2		
A – ELECTRICAL WORKS	12.4	Supply, fixing, testing and commissioning of 4U Communication Rack with 24 port network switch with in-link fiber optics capability. Speed of 1GBPS	Nos	2		
A – ELECTRICAL WORKS	13	COPPER PLATE EARTHING: Supply, assembling, installing, testing and commissioning all items for constructing copper plate earthing station comprising one copper earthing plate 600 x 600 x 3 mm thick, 25 mm dia medium class GI watering pipe (minimum 4.5 mm deep), GI funnel with stainless steel wire mesh strainer, concrete watering chamber with RCC cover, 100 kgs common salt, 200 kgs fire charcoal powder, earthing conductor size 25mm x 3mm from plate to ground level as per revised IS 3043 standard, required hardware & miscellaneous items. Work includes digging pit, burying earth conductor plate and installing watering arrangement. Rate shall include around 100m total earthing strip.	Nos	5		
A – ELECTRICAL WORKS	**14**	**Emergency Switch**				
A – ELECTRICAL	14.1	Supply & fixing of Emergency Stop switch with NO & NC element with base box	Nos	5		

Rupnarayan

WORKS						
A – ELECTRICAL WORKS	14.2	Supply, erection, testing and commissioning of Warning Lamp for RED, Yellow, Green & Red, Green for OBI	Nos	1		
A – ELECTRICAL WORKS	**15**	**PERFORATED TYPE GI CABLE TRAY**				
A – ELECTRICAL WORKS	15.1	Supply & fixing of 105 x 50 mm CMS Tray for CCTV, IRM and speaker cable pulling	Mtrs	40		
B – FIRE SAFETY	1	Supply, fixing, testing and commissioning of 2 zone Conventional Fire Alarm Panel with complete set (RAVEL make)	Nos	1		
B – FIRE SAFETY	2	Supply, fixing, testing and commissioning of conventional Smoke Detectors with base (System Sensor make)	Nos	12		
B – FIRE SAFETY	3	Supply, fixing, testing and commissioning of Conventional Manual Call Point (RAVEL make)	Nos	1		
B – FIRE SAFETY	4	Supply, fixing, testing and commissioning of Conventional Hooters / Sounders (RAVEL make)	Nos	2		
B – FIRE SAFETY	5	Supply, fixing, testing and commissioning of 2 core 1.5 sq.mm Copper armoured cable (Polycab make)	Mtrs	100		
B – FIRE SAFETY	6	Supplying, installing Dry chemical powder type fire extinguisher of 5kgs capacity, with initial filling in brand new cylinder with powder-coated finish, fitted with Gun metal union, high pressure CO2 gas cartridge, discharge hose, wall mounting bracket etc. complete, confirming to IS:2171 of approved make & complete as directed by EIC	Nos	4		
TURNKEY – CIVIL & INTERIOR	**A**	**PIT CONSTRUCTION WORKS**				
TURNKEY – CIVIL & INTERIOR	1	310mm deep Pit to be constructed as per the requirement of the linear accelerator	Sqm	8		
TURNKEY – CIVIL & INTERIOR	2	310mm deep trench to be made inside the treatment room and console room, to be constructed as per the requirement of the linear accelerator and console room	Rmt	18		
TURNKEY – CIVIL & INTERIOR	3	500mm Back filling and leveling with PCC	Sq.ft	1000		
TURNKEY – CIVIL & INTERIOR	4	Baseframe Filling work and finishing work	CUM	3		
TURNKEY – CIVIL & INTERIOR	**B**	**CIVIL INTERIOR WORKS**				
TURNKEY – CIVIL & INTERIOR	1	Wall Panelling in the Bunker	Sq.ft	2200		
TURNKEY – CIVIL & INTERIOR	2	2-3mm Vinyl flooring in bunker and Console room	Sq.ft	2000		
TURNKEY – CIVIL & INTERIOR	3	Two coats of Plastic Emulsion Paint	Sqm	70		
TURNKEY – CIVIL & INTERIOR	5	Rodent Treatment, Glue pads	LS	5		
TURNKEY – CIVIL & INTERIOR	6	False Ceiling work with Theme based design on center-8'*8' (Sky light work)	LS	1		
TURNKEY –	7	Openable covers for the trenches 300 mm width	Meter	18		

Rupnarayan

CIVIL & INTERIOR						
TURNKEY – CIVIL & INTERIOR	**C**	**Furniture Works**				
TURNKEY – CIVIL & INTERIOR	1	Revolving chairs for Technologist	Nos	6		
TURNKEY – CIVIL & INTERIOR	3	Cupboard with laminate door shutter for storage of spare parts and accessories (2m x 0.75m x 2m)	Nos	4		
TURNKEY – CIVIL & INTERIOR	4	Overhead storage in console & TPS rooms (1.8m x 0.75m x 0.45m)	Nos	2		
TURNKEY – CIVIL & INTERIOR	7	Name boards for all rooms. All the rooms in the complex will be signposted.	Nos	10		
TURNKEY – CIVIL & INTERIOR	10	Workstation tables in console rooms (1.8m x 0.75m x 0.75m)	Nos	1		
TURNKEY – CIVIL & INTERIOR	11	Workstation tables in TPS Room rooms (2.2m x 0.75m x 0.75m)	Nos	1		
TURNKEY – CIVIL & INTERIOR	14	Bunker Door and Console Door – Wooden door	Sqm	20		
TURNKEY – CIVIL & INTERIOR	**D**	**PLUMBING WORKS**				
TURNKEY – CIVIL & INTERIOR	1	Chiller platform of size 3.5m x 3.5m x 0.3m in M15 Concrete with shed of 0.5 mm thick GI Trafford sheet roofing to cover machine chiller including vertical/curved surface fixed self-drilling screws of 8 mm diameter with bitumen washers including structural steel work of purlins, rafters and trusses with one coat of metal primer and two coats of enamel paint.	Nos	1		
TURNKEY – CIVIL & INTERIOR	2	Supply & installation and commissioning of chiller inlet & outlet Equipments and Accessories	LS	1		
TURNKEY – CIVIL & INTERIOR	3	Supply & installation and commissioning of chiller water copper piping 15/8" 18 gauge with insulation 19mm thick	RM	150		
TURNKEY – CIVIL & INTERIOR	4	Core Cutting Bunker Wall 1500 Depth 150 Dia	nos	4		
TURNKEY – CIVIL & INTERIOR	5	Core Cut Hole Repairing with GP-2 chemical	nos	4		
TURNKEY – CIVIL & INTERIOR	**E**	**MISC WORKS**				
TURNKEY – CIVIL & INTERIOR	1	Bunker EMO, LMO and warning light setup and related cabling and accessories fixation	LS	1		
TURNKEY – CIVIL & INTERIOR	**F**	**HVAC**				
TURNKEY – CIVIL & INTERIOR	1	HVAC – Ducting work	Sq.Ft	2700		
TURNKEY – CIVIL & INTERIOR	2	HVAC unit (7.5Tr – 2 Nos & 3T – 2 Nos)	Nos	2		
TURNKEY –	3	Manpower, Material and accessories fixation	LS	1		

Rupnarayan

CIVIL & INTERIOR		charges				
TURNKEY – CIVIL & INTERIOR	4	G1 Air quality testing and modification work	LS	1		
TURNKEY – CIVIL & INTERIOR	**G**	**SHIELDING AND CIVIL MODIFICATION WORK**				
TURNKEY – CIVIL & INTERIOR	1	Shielding in the bunker at primary walls, near Door and Maze Ceiling	CUM	17		
TURNKEY – CIVIL & INTERIOR	2	Civil modification work	LS	1		
		TOTAL QUOTED AMOUNT				
		TOTAL QUOTED AMOUNT with GST				

Bidder's Declaration

I/We have read and understood the NIQ, scope of work, BOQ, specifications and terms and conditions. I/We agree to execute the work in accordance with the tender documents and the rates quoted above.

Name of Firm / Agency	
Name & Designation of Authorized Signatory	
Signature with Seal	
Date and Place	

23.11.26

Director(Admin)
Mahavir Cancer Sansthan

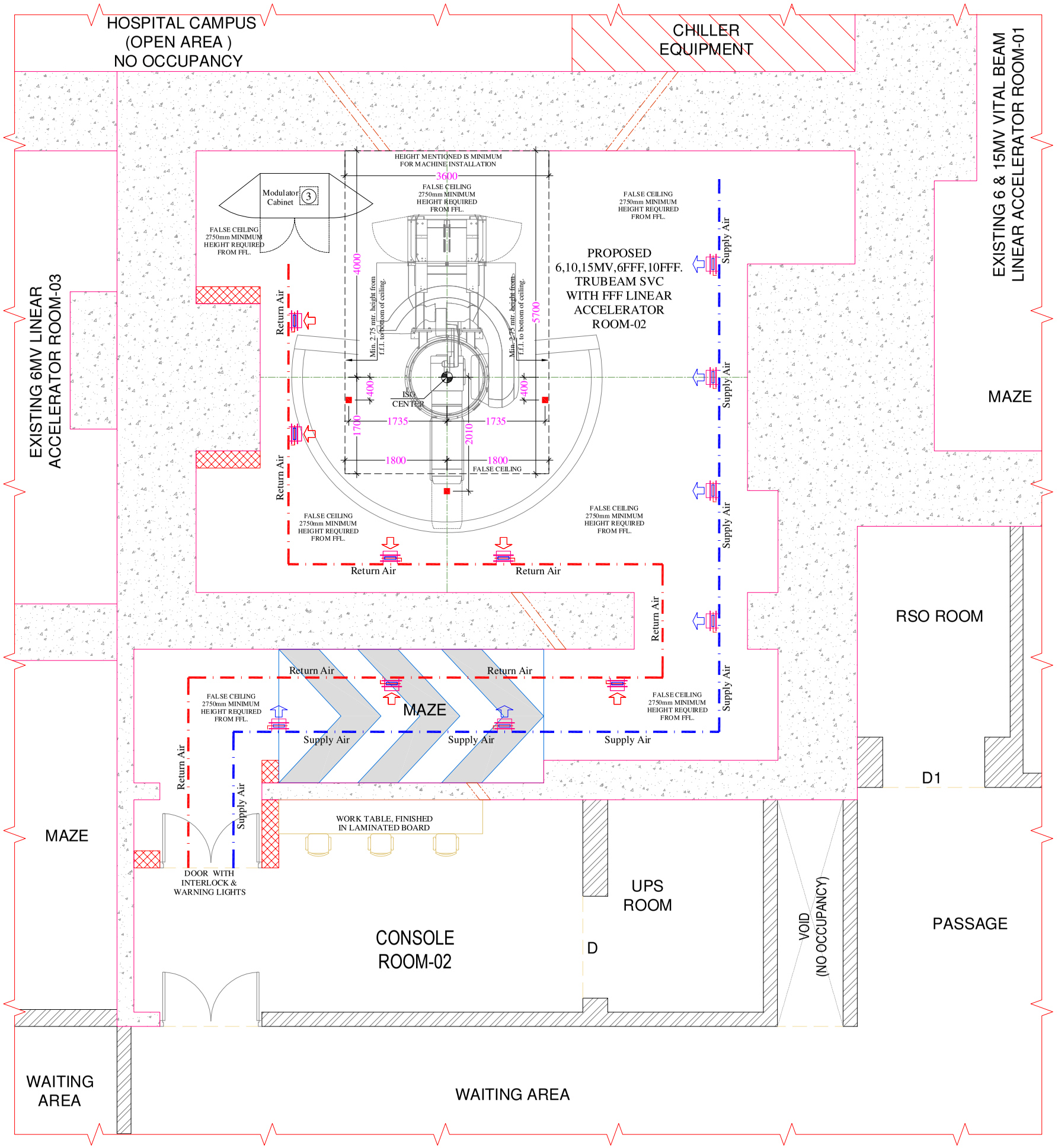

A.C. DUCTING & FALSE CEILING LAYOUT PLAN

* NOTE - FALSE CEILING HEIGHT AS PER SITE CONDITION DISCUSS WITH PROJECT MANAGER.

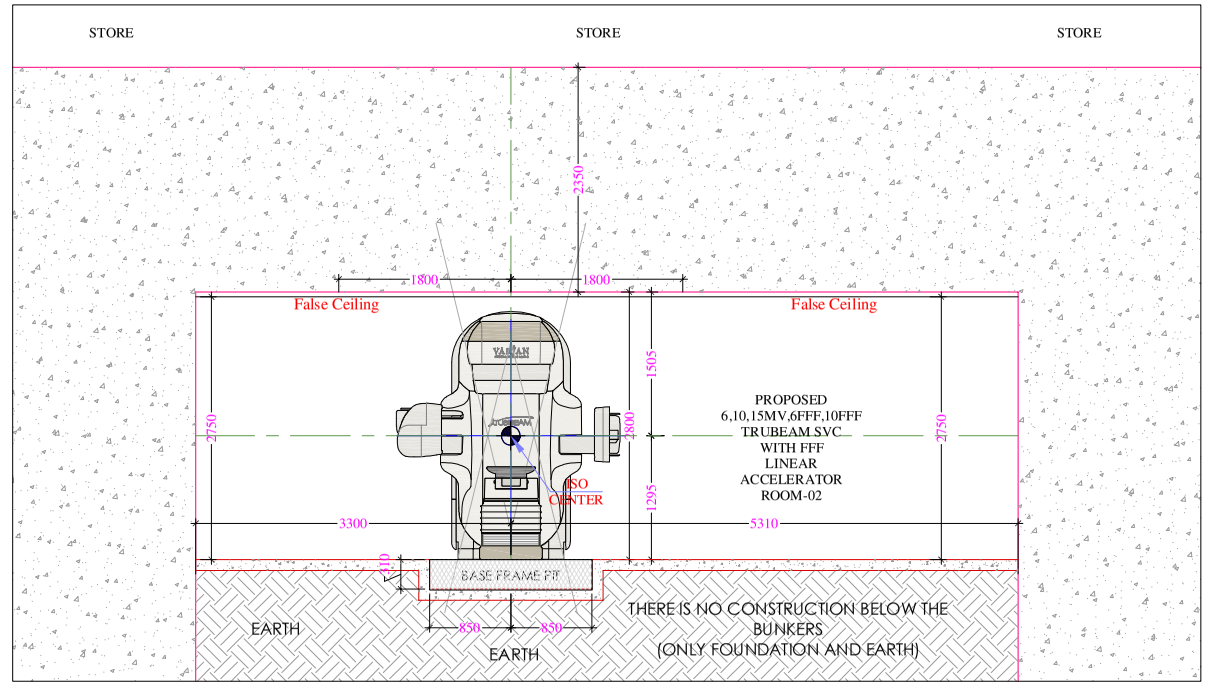

TYPICAL SECTION

Table -1

Truebeam / Edge						
Room Name	**Machine Heat Load**	**Temperature Range**	**Humidity**	**Air Quality Requirement**	**Remarks**	
Bunker	12.5 kW	20 degrees +/- 2 degrees	60% or Less	G1 Air Quality	24 X 7 Cooling required.	Volume, Light, Human movement or heat load of any other equipment to be considered extra. Fresh Air should be part of design for Linac bunker area
Console	3 kW	20 degrees +/- 2 degrees	60% or Less	G1 Air Quality	24 X 7 Cooling required.	
TPS Room	as per 10-12 computers	20 degrees +/- 2 degrees	60% or Less	G1 Air Quality	Cooling required during working hours	
Server Room	3 kW	20 degrees +/- 2 degrees	60% or Less	G1 Air Quality	24 X 7 Cooling required.	
UPS Room	6 kW	20 degrees +/- 2 degrees	60% or Less	G1 Air Quality	24 X 7 Cooling required.	

NOTES :-

- DUCTS ARE SHOWN INDICATIVELY, ITS LOCATION & SIZE NEEDS TO BE WORKED OUT BY RESPECTIVE CONSULTANTS BASED ON ENVIRONMENTAL REQUIREMENTS.
- LOCATION OF SUPPLY & RETURN DUCT IS JUST INDICATIVE, CONCERNED CONSULTANT SHOULD MODIFY LOCATION AS PER REQUIREMENTS OF DESIGN.
- NO DUCT SHOULD BE PLANNED BELOW CEILING HOOKS OR ABOVE THE MACHINE.
- OCCUPANCY FACTORS AND VOLUME CONSIDERATION FOR HVAC CALCULATION WILL BE OVER & ABOVE MENTIONED HEAT LOADS.
- 4 TO 6 AIR CHANGES PER HOUR ARE REQUIRED FOR LINAC AND FRESH AIR SHOULD BE PART OF THE DESIGN.
- ENSURE THAT ENVIRONMENTAL CONDITIONS ADHERE TO THE G1 LEVEL STANDARD, WHICH IS THE BENCHMARK FOR ELECTRONIC COMPONENTS OPERATION. TESTING MUST BE CONDUCTED EVERY SIX MONTHS. THIS REQUIREMENT APPLIES TO BUNKER, CONSOLE, SERVER, TPS, AND UPS ROOMS. PLEASE NOTE THAT ANY PART FAILURES RESULTING FROM ADVERSE ENVIRONMENTAL CONDITIONS ARE NOT COVERED UNDER WARRANTY OR CMC AGREEMENTS.
- PLEASE REFER TABLE-1 FOR HVAC REQUIREMENT.

Severity Level	G1 Mild
Copper Reactivity Level (In Angstroms)	< 300
Silver Reactivity Level (In Angstroms)	< 200

LEGEND :-

Supply air

Return air

NOTES:-

THE HIGHLIGHTED LOCATION IS MARKING FOR IDENTIFIED CAMERA SYSTEM POSTS. PLEASE MAINTAIN A GAP OF 300MM WHILE PLANNING HVAC DUCT & DO NOT PLAN ANY THROW OR RETURN GRILL 600MM ON EITHER SIDE OF THE LOCATION.

NOTE :- All Dimension's are in Millimeters Unless Specified.

PROJECT :- PROPOSED LAYOUT FOR 15MV LINEAR ACCELERATOR OF MAHAVIR CANCER SANSTHAN AT PHULWARI SHARIF PATNA - 801505

Scale:	A.C. DUCTING & FALSE CEILING LAYOUT PLAN & DETAILS.	DRAWN BY :- R.W.
Date: 10.08.2026		CHECKED BY :- S.D.
varian A Siemens Healthineers Company Siemens Healthcare Pvt.Ltd. Unit No. 9A, 9th Floor, North Tower, Godrej One, pirojshanagar, Eastern Express Highway, Vikhroli East, Mumbai - 400079. India.	6,10,15MV,6FFF,10FFF. TRUBEAM SVC WITH FFF LINEAR ACCELERATOR ROOM-02.	R0
Project No:	Revisions / Date / Name: ... / ... / ...	

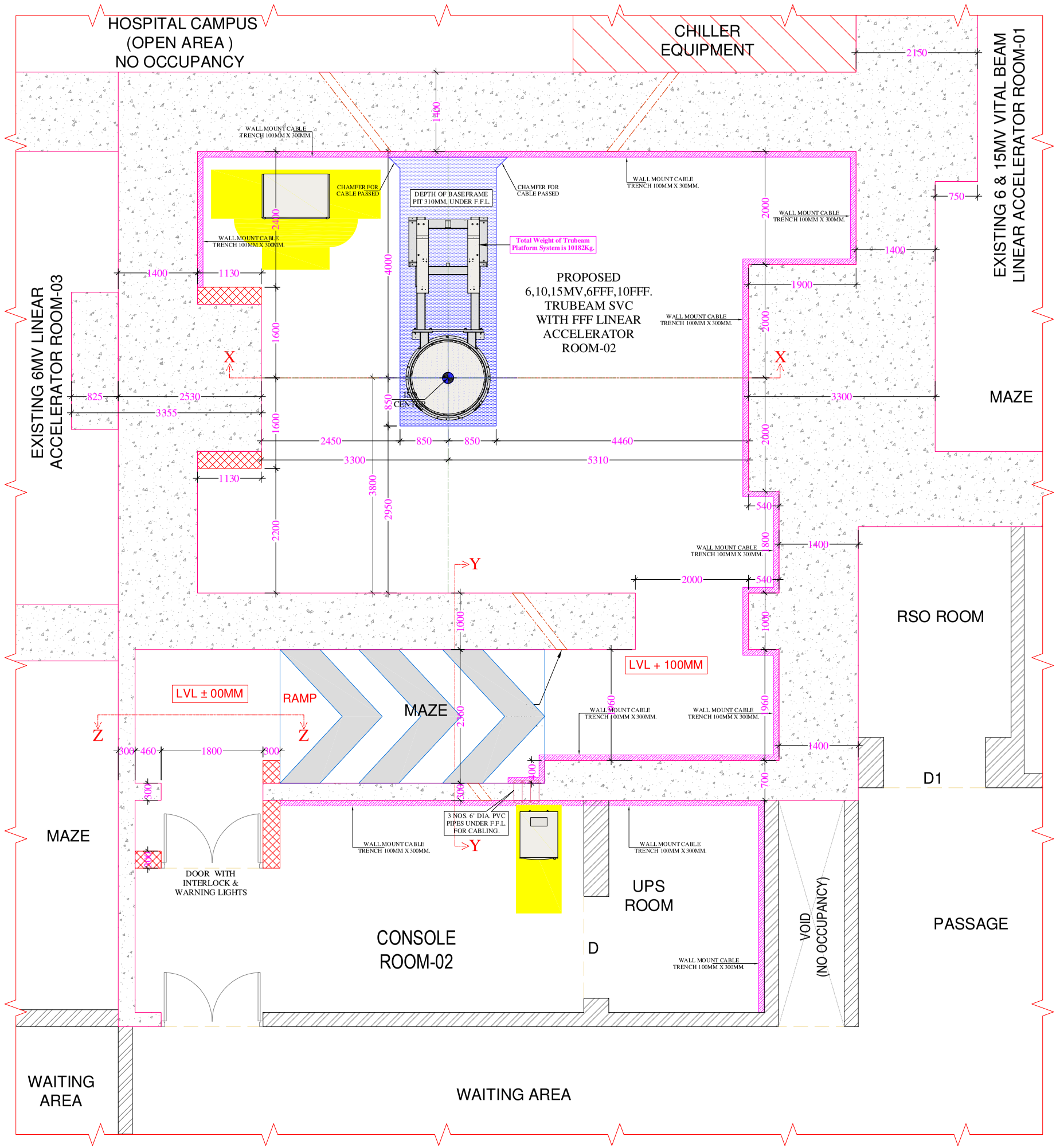

BASE FRAME PIT LAYOUT PLAN

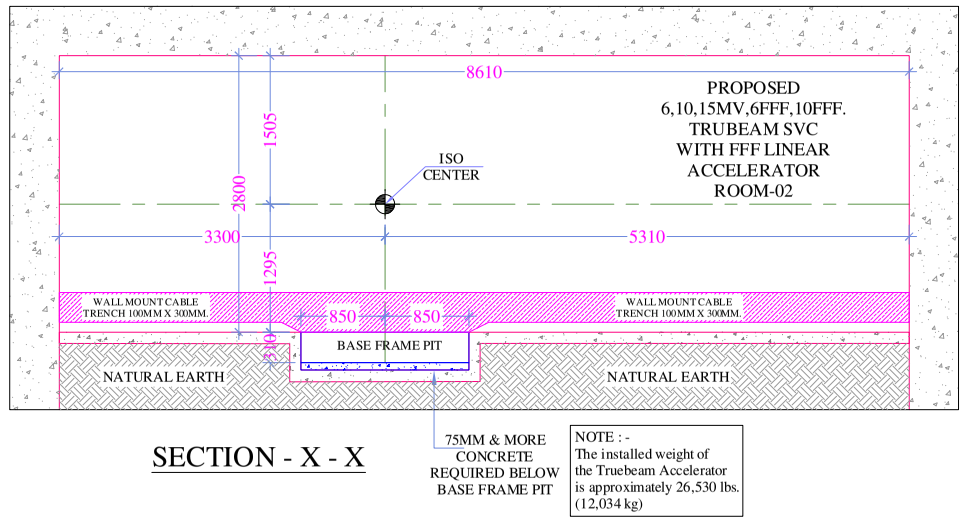

NOTE : -
The installed weight of the Truebeam Accelerator is approximately 26,530 lbs. (12,034 kg)

SECTION - X - X

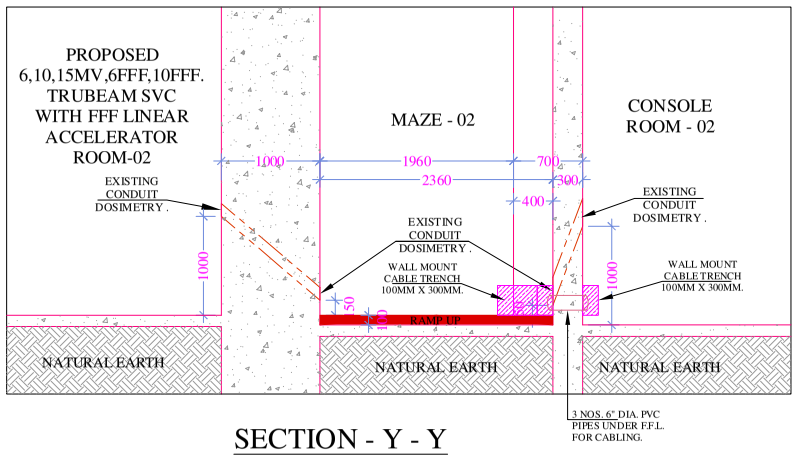

SECTION - Y - Y

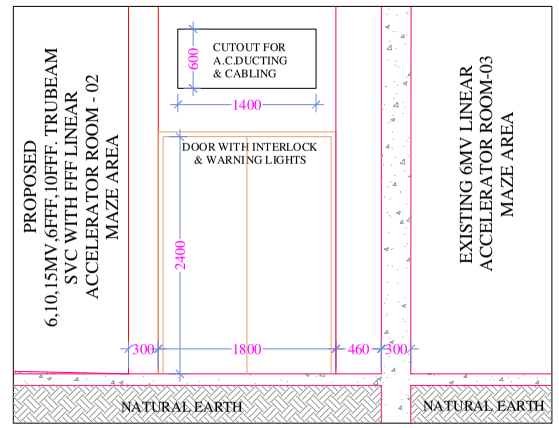

SECTION - Z - Z

LEGEND :-

- DEPTH OF BASEFRAME PIT 310MM, UNDER F.F.L.
- WALL MOUNT CABLE TRENCH 100MM X 300MM.

NOTE :- All Dimension's are in Millimeters Unless Specified.

PROJECT :- PROPOSED LAYOUT FOR 15MV LINEAR ACCELERATOR OF MAHAVIR CANCER SANSTHAN AT PHULWARI SHARIF PATNA - 801505

Scale:	BASE FRAME PIT LAYOUT PLAN & DETAILS.	DRAWN BY :- R.W.
Date: 10.08.2026		CHECKED BY :- S.D.
varian A Siemens Healthineers Company Siemens Healthcare Pvt.Ltd. Unit No. 9A, 9th Floor, North Tower, Godrej One, pirojshanagar, Eastern Express Highway, Vikhroli East, Mumbai - 400079. India.	6,10,15MV,6FFF, 10FFF. TRUBEAM SVC WITH FFF LINEAR ACCELERATOR ROOM-02.	R1
Project No:	Revisions / Date / Name: .. / .. / ..	

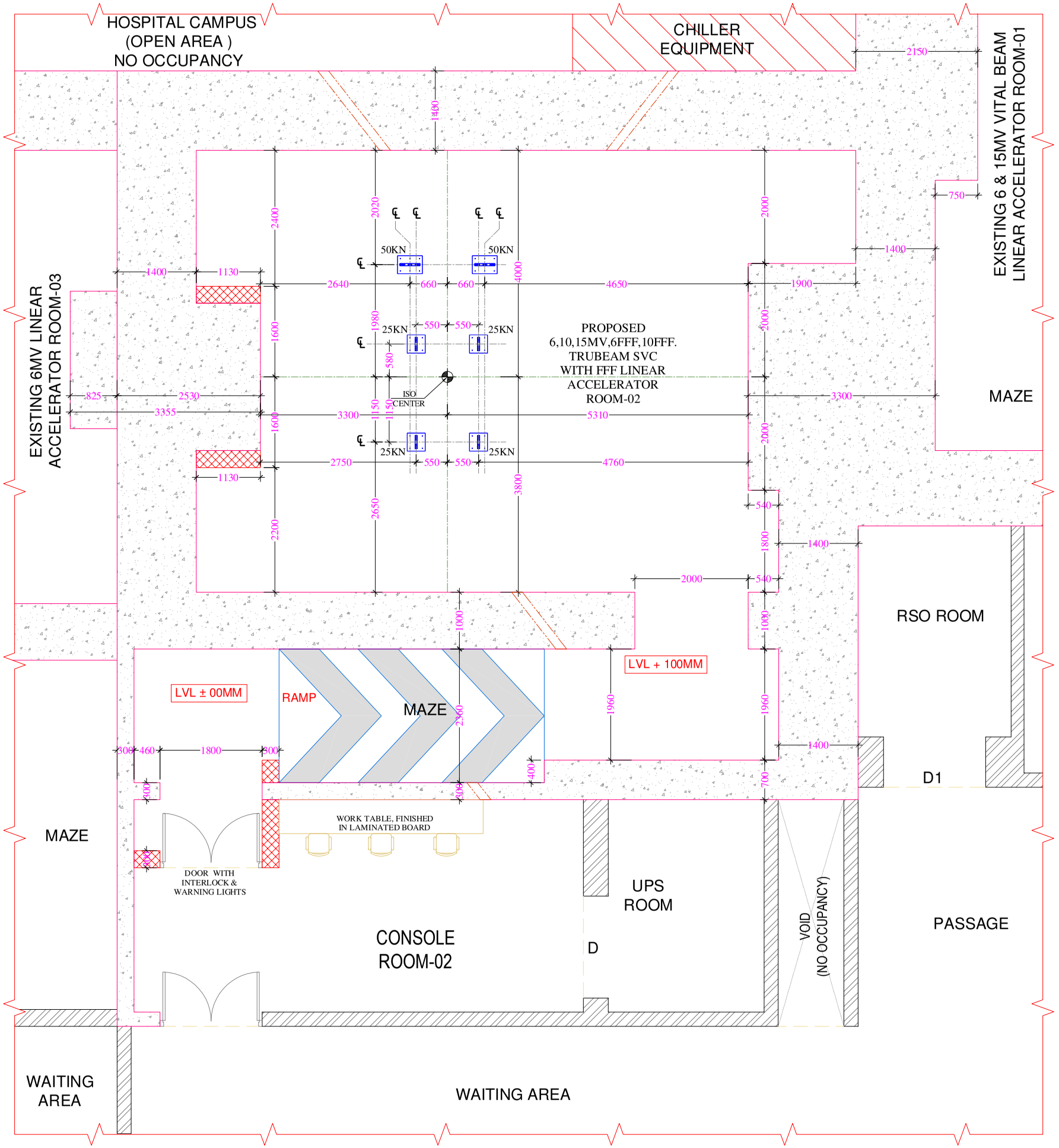

CEILING HOOKS LOCATION PLAN

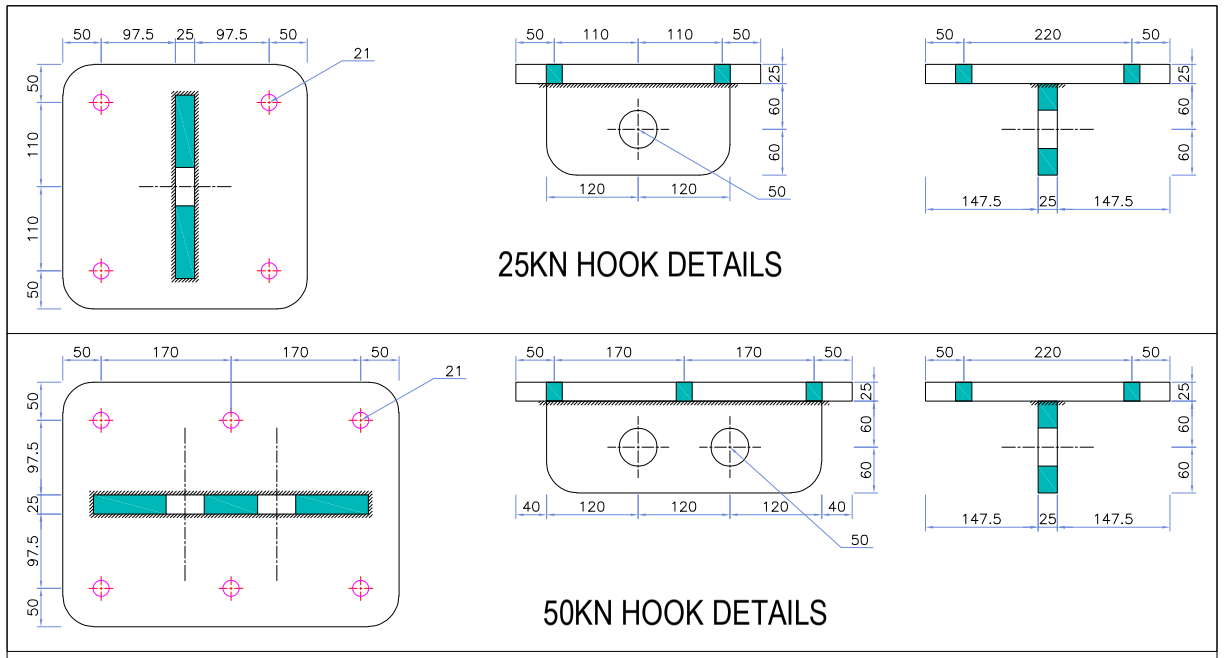

15MV LOAD HOOK FABRICATION DETAILS

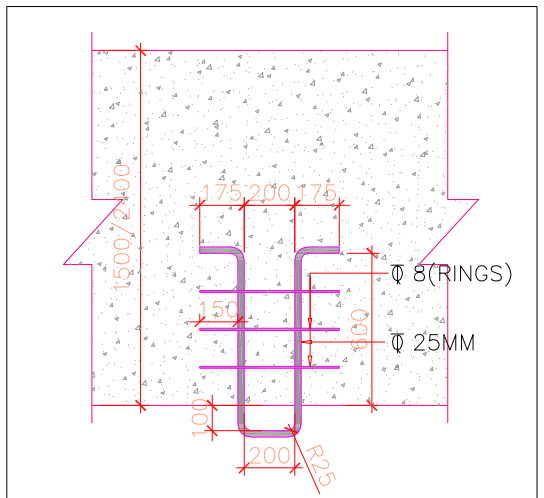

HOOK DETAIL IN LINIC BLOCK
(FOR AXIAL LOAD 50KN)
FOR LOCATION & ORIENTATION
PLEASE REFER ARCH DWG.

NOTES FOR CEILING HOOKS :-

- ALL DIMENSIONS ARE IN MM UNLESS SPECIFIED.
- DO NOT PLAN ANY DUCTS BELOW CEILING HOOK OR ABOVE MACHINE FOOT PRINTS (CONSIDER BASEFRAME PIT DIMENSIONS FOR FOOT PRINTS).
- PLEASE FOLLOW ORIENTATION OF DRAWING WHILE USING DETAIL OF 'BEFORE CASTING'.
- FOR HOOK DETAILS AFTER CASTING CONSIDER FORCE WHICH IS COMING ON LOAD HOOKS & TAKE HELPS OF CONSULTING STRUCTURAL ENGINEER.
- REMOVABLE GRID CEILING IS PREFERRED.

NOTE :- All Dimension's are in Millimeters Unless Specified.

PROJECT :- PROPOSED LAYOUT FOR 15MV LINEAR ACCELERATOR OF MAHAVIR CANCER SANSTHAN AT PHULWARI SHARIF PATNA - 801505

Scale:	CEILING HOOKS LOCATION PLAN & DETAILS.	DRAWN BY :- R.W.
Date: 10.08.2026		CHECKED BY :- S.D.
varian A Siemens Healthineers Company	6,10,15MV,6FFF,10FFF. TRUBEAM SVC WITH FFF LINEAR ACCELERATOR ROOM-02.	R1

Siemens Healthcare Pvt.Ltd.
Unit No. 9A, 9th Floor, North Tower, Godrej One, pirojshanagar, Eastern Express Highway, Vikhroli East, Mumbai - 400079. India.

Revisions	Date	Name
...	...	...
...	...	...
...	...	...
Project No: ...	...	...

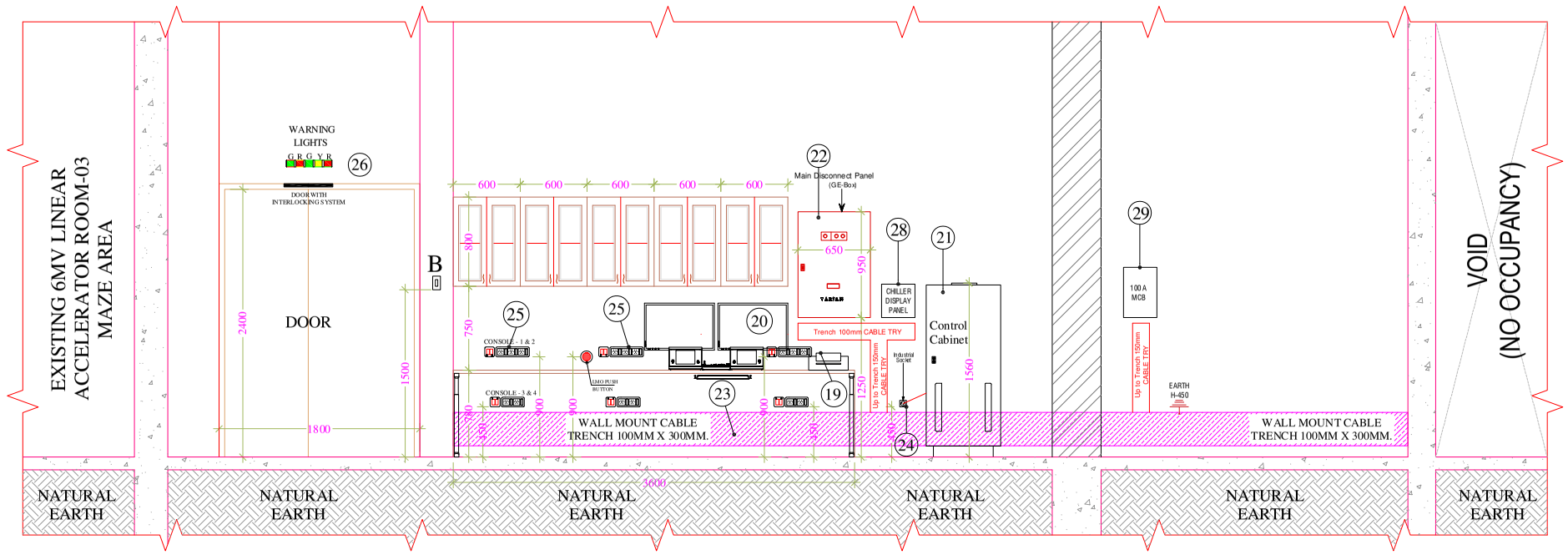

VIEW ELEVATION - A
(CONTROL CONSOLE ROOM-02)

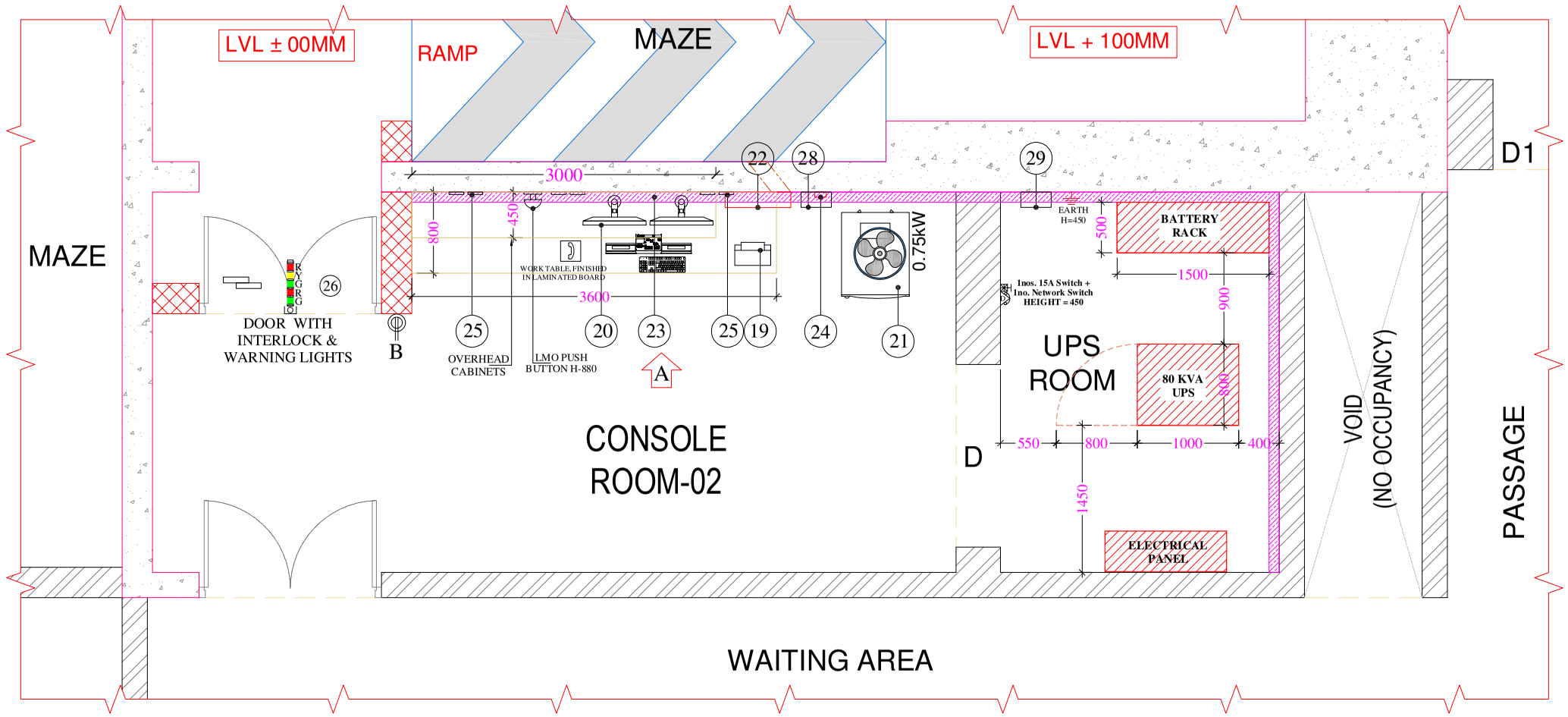

PLAN
(CONTROL CONSOLE ROOM-02)

NOTE :- All Dimension's are in Millimeters Unless Specified.

PROJECT :- PROPOSED LAYOUT FOR 15MV LINEAR ACCELERATOR OF MAHAVIR CANCER SANSTHAN AT PHULWARI SHARIF PATNA - 801505

Scale:	CONSOLE ROOM PLAN & DETAILS.	DRAWN BY :- R.W.
Date: 10.08.2026		CHECKED BY :- S.D.

varian
A Siemens Healthineers Company
Siemens Healthcare Pvt.Ltd.
Unit No. 9A, 9th Floor, North Tower, Godrej One, pirojshanagar, Eastern Express Highway, Vikhroli East, Mumbai - 400079, India.

6,10,15MV,6FFF,10FFF. TRUBEAM SVC WITH FFF LINEAR ACCELERATOR ROOM-02.

Revisions	Date	Name
...	...	...
...	...	...
...	...	...
Project No: ...	...	...

R0

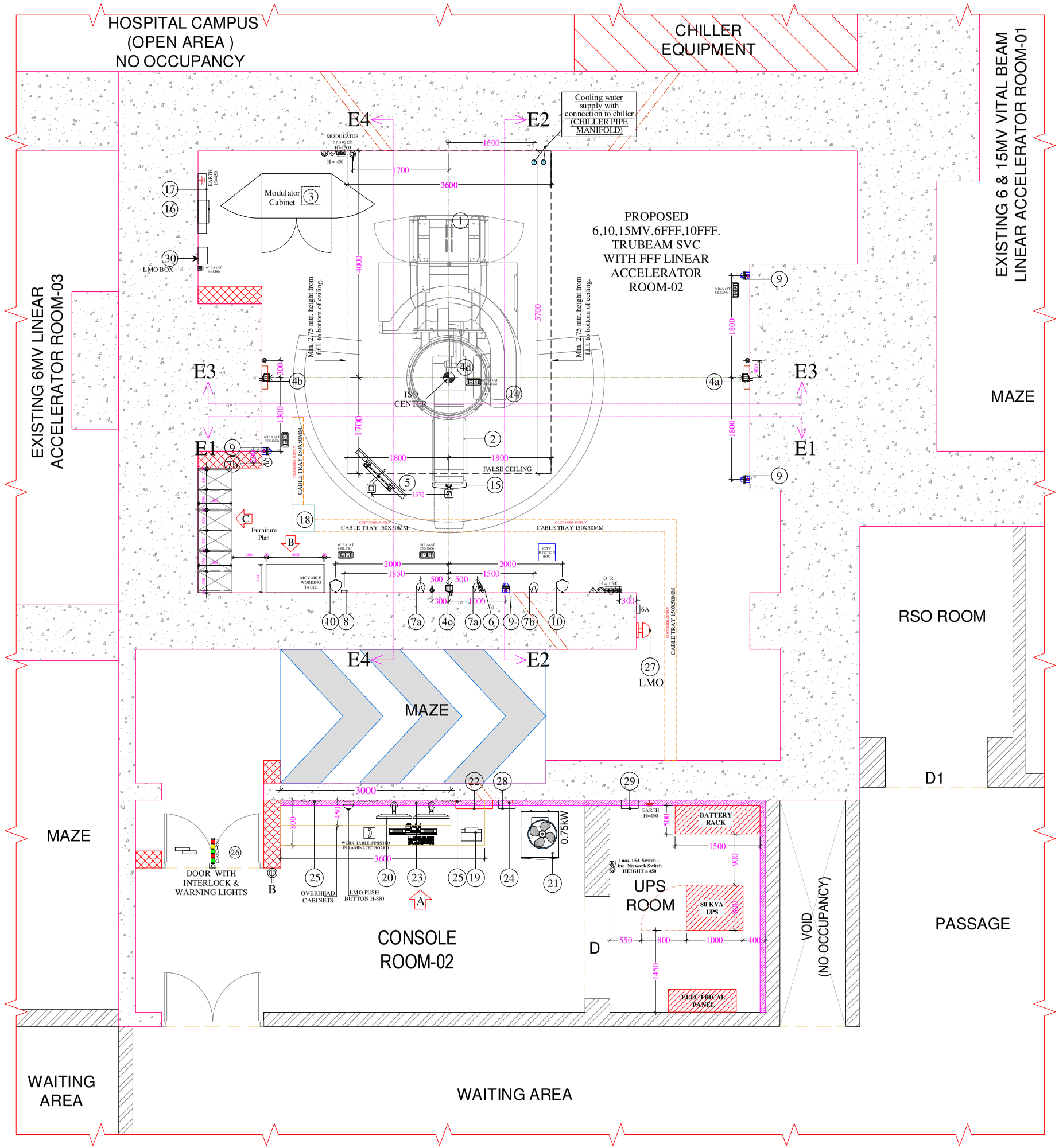

ELECTRICAL POSITIONS LAYOUT PLAN

NOTE :- All Dimension's are in Millimeters
Unless Specified.

PROJECT :- PROPOSED LAYOUT FOR
15MV LINEAR ACCELERATOR OF
MAHAVIR CANCER SANSTHAN AT
PHULWARI SHARIF PATNA - 801505

Scale:	ELECTRICAL POSITIONS LAYOUT & DETAILS.	DRAWN BY :- R.W.
Date: 10.08.2026		CHECKED BY :- S.D.
varian A Siemens Healthineers Company Siemens Healthcare Pvt.Ltd. Unit No. 9A, 9th Floor, North Tower, Godrej One, pirojshanagar, Eastern Express Highway, Vikhroli East, Mumbai - 400079. India.	6,10,15MV,6FFF,10FFF. TRUBEAM SVC WITH FFF LINEAR ACCELERATOR ROOM-02.	R0
Project No:	Revisions / Date / Name: ... / ... / ...	

Linear Accelerator True Beam Room

Positions & Electrical Legend								**Electrical** CUSTOMER SUPPLY						
Position 1. to 15. in Treatment Room		SUPPLY BY	Height mm	Width mm	Depth mm	Weight kg	Heat Load kW	Power Socket CUSTOMER SUPPLY	Power Socket Height From FFL mm	Qty CUS. SUPPLY	Equipment Height From FFL mm	Distance From ISO Center mm	Ø 50mm Open Conduit upto Pull Box (18) CUSTOMER SUPPLY
	TREATMENT ROOM						7.0						
1.	Clinac TrueBeam Stand / Gantry Assembly	VARIAN SUPPLY	2642	1270	3759	6577	/	/		/	/	/	/
2.	Exact Tretament Couch	VARIAN SUPPLY	1702	610	2159	615	/	/		/	/	/	/
3.	Modulator Cabinet	VARIAN SUPPLY	1680	1220	790	816	/	/		/	/	/	/
4.	Laser 4a, 4b (depending brand) Laser 4c (depending brand) Laser 4d (depending brand)	VARIAN SUPPLY	/	/	/	/	/	6/16 A 6/16 A 6/16 A	915 1900 ceiling	2 1 1	1295 2000 ceiling	300 300 300	No
5.	Room Monitor	VARIAN SUPPLY	/	/	/	/	/	6/16 A	ceiling	2	2240	1370	Yes
6.	Live View Camera (radiation-hardened) with Mic.	VARIAN SUPPLY	/	/	/	/	/	6/16 A	ceiling	1	2300	560	Yes
7a.	CCTV-Cameras (Dome)	VARIAN SUPPLY	/	/	/	/	/	6/16 A	ceiling	2	1820	500	Yes
7b.	CCTV-Cameras (Dome) (Subject to customer order)	VARIAN SUPPLY	/	/	/	/	/	6/16 A	ceiling	2	2500	REF.DWG	Yes
8.	PAVS Systems (As per order)+cat 6 cable for networking	VARIAN SUPPLY	/	/	/	/	/	6/16 A		1	1000	1850	Yes
9.	Emergency off (No + NC Type) 4cx1.500mm copper cable upto RJB	CUSTOMER SUPPLY	/	/	/	/	/			4	1500	REF.DWG	
10.	Intercom Speakers	VARIAN SUPPLY	/	/	/	/	/	6/16 A	ceiling	2	2500	REF.DWG	
11.	Accessories Electron Applicators	SUBJECT TO CUSTOMER ORDER	/	/	/	/	/	/	/	/	/	/	/
12.	Accessories Wedge		/	/	/	/	/	/	/	/	/	/	/
13.	Leadblooks (# of blooks customer depending)		/	/	/	/	/	/	/	/	/	/	/
14.	Base Frame	VARIAN SUPPLY	/	/	/	/	/	/	/	/	/	/	/
15.	NDI Camera for Gaiting and Optical Guidance	VARIAN SUPPLY	/	/	/	/	/	6/16 A	ceiling	1	2235	/	
16.	Relay Junction Box	VARIAN SUPPLY	550	450	150	/	/	/	/	/	Wall Mounted	/	/
17.	D.B Panel (customer supply)	CUSTOMER SUPPLY	/	/	/	/	/	/	/	/	Wall Mounted	/	/
18.	Pull Box 600x400x150mm Above the False Celling		/	/	/	/	/	/	/	/	/	/	/
Position 19. to 25. in Control Room													
	CONTROL ROOM		/	/	/	/	5.0	/	/	/	/	/	/
19.	Printer (1x)	SUBJECT TO CUSTOMER ORDER	/	/	/	/	/	/	/	/	/	/	/
20.	Treatment Console							/	/	/	/	/	/
	Control Console		/	/	/	/	/	/	/	/	/	/	/
	CCTV-Monitor (2x)		/	/	/	/	/	/	/	/	/	/	/
	Image and Data Monitor (2x)		/	/	/	/	/	/	/	/	/	/	/
21.	Truebeam Imaging / Truebeam Control Cabinet	VARIAN SUPPLY	1560	762	850	/	/	/	/	/	/	/	/
22.	Truebeam Main Disconnect Panel (GE-Box)	VARIAN SUPPLY	1000	650	250	70	/	/	/	/	/	/	/
23.	Cable Trench/ Pull Box 750x300x150mm	CUSTOMER SUPPLY	/	/	/	/	/	/	/	/	/	/	/
24a.	IEC 60309,30A,250V power receptacle & plug	VARIAN SUPPLY	/	/	/	/	/	6/16 A	/	1	450		
24b.	Iindustrial Socket	CUSTOMER SUPPLY	/	/	/	/	/	6/16 A	/	1	450		
25.	Power socket above control table + CAT 6 Cable for networking from TPS + High speed internet	CUSTOMER SUPPLY	/	/	/	/	/	6/16 A	/	10 5 1	900		
26.	Warning light + Door with interlook 1.5mm x 20C copper cable	CUSTOMER SUPPLY	/	/	/	/	/	/	/	1	/	/	/
27.	LAST MAN OUT SWITCH (LMO)	VARIAN SUPPLY	/	/	/	/	/	6 A	/	1	1500	/	/
	1.5mm x 8C copper cable & Electrical Points	CUSTOMER SUPPLY											
28.	CHILLER DISPLAY PANEL		SIZE 2X2 FT. CHILLER VENDORS SUPPLY										
29.	100 A MCB PANEL FOR CHILLER	CUSTOMER SUPPLY	CUSTOMER SUPPLY										
30.	LAST MAN OUT SWITCH - BOX	VARIAN SUPPLY	VARIAN SUPPLY										
R	CFL FIXTURE ROOM LIGHT (LUX LEVEL)	CUSTOMER SUPPLY	CEILING										
D	DIMMER LIGHT	CUSTOMER SUPPLY	CEILING										
	MAZE LIGHT	CUSTOMER SUPPLY	CEILING										
	6/16A SWITCH SOCKET OUTLET	CUSTOMER SUPPLY	/					/				/	
	6/16A SWITCH SOCKET OUTLET	CUSTOMER SUPPLY	/					/				/	
	TELEPHONE OUTLET	CUSTOMER SUPPLY	/					/				/	
	DATA OUTLET	CUSTOMER SUPPLY	/					/				/	
	HOSPITAL UPS / RAW POWER POINTS INSIDE BUNKER	CUSTOMER SUPPLY	/					/				/	

SUGGEDTIONS	
LIGHTING	
1)	Lux level of 500-800 by fluorescent light for normal operational activities. like patient transfer on & from the stretcher / couch, equipment setting, room cleaning & maintenance.
2)	Lux level of 100 with the help of incandescent lighting luminous controlled by dimmer for laser positioning.
CEILING MATERIAL	
1)	Mineral fibre grid deiling.
HEIGHT	
1)	Min. 2.9 mtr. height from f.f.l. to bottom of ceiling in the area above machine as demarcated in the section. rest area can be lowered up to 2.75 mtr.
RECOMMENDATION	
1)	No. exposed metal finishes over large area. on the surface.

WIRE SPECIFICATION

NETWORKING:-	Cat 6 RG-45 Connector
TELEPHONE :-	As per Hospital Design Standard.
CAMERA :-	CCTV Cable (3+1- 2 Pairs +CAT6 Cable) up to console.

NOTE :- All Dimension's are in Millimeters Unless Specified.

PROJECT :- PROPOSED LAYOUT FOR 15MV LINEAR ACCELERATOR OF MAHAVIR CANCER SANSTHAN AT PHULWARI SHARIF PATNA - 801505

Scale:	ELECTRICAL POSITIONS LEGEND & DETAILS.	DRAWN BY :- R.W.
Date: 10.08.2026		CHECKED BY :- S.D.
varian A Siemens Healthineers Company Siemens Healthcare Pvt.Ltd. Unit No. 9A, 9th Floor, North Tower, Godrej One, pirojshanagar, Eastern Express Highway, Vikhroli East, Mumbai - 400079. India.	6,10,15MV,6FFF,10FFF. TRUBEAM SVC WITH FFF LINEAR ACCELERATOR ROOM-02.	R0
Project No:	Revisions / Date / Name: ... / ... / ...	

Typical Varian Accessoires for Clinac

Electron Applicator
Varian Delivery

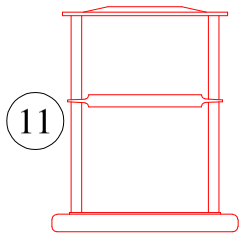

Lead Block Tray
Varian Delivery

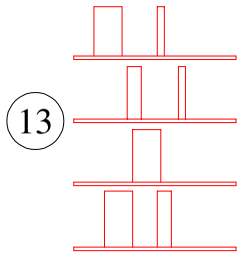

MLC Wedge Trays
Varian Delivery

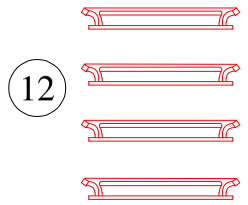

Details

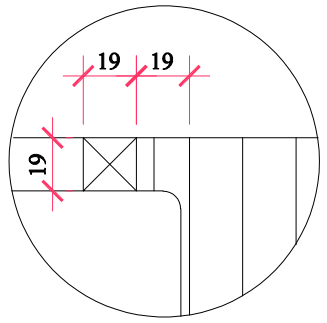

Detail 1

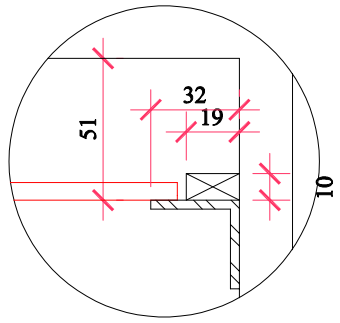

Detail 2

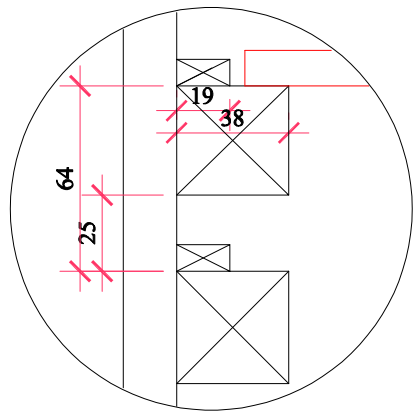

Detail 3

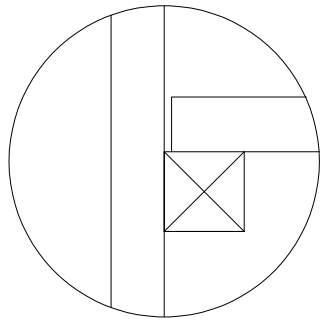

Detail 4

Details

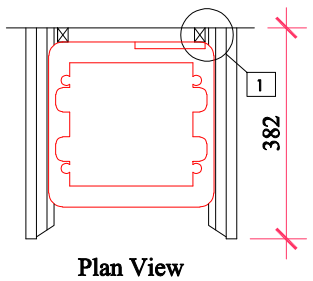

Plan View

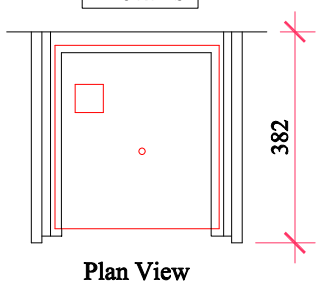

Plan View

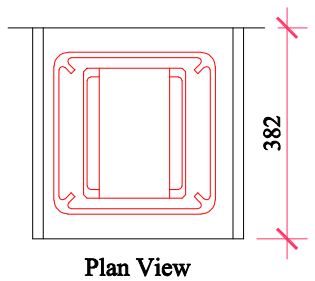

Plan View

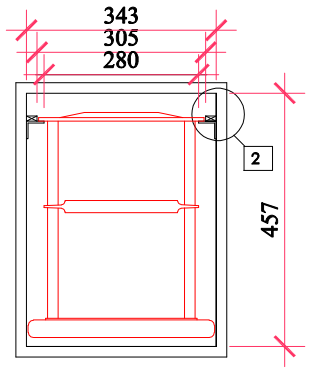

Elevation

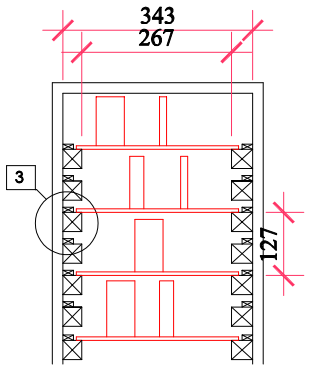

Elevation

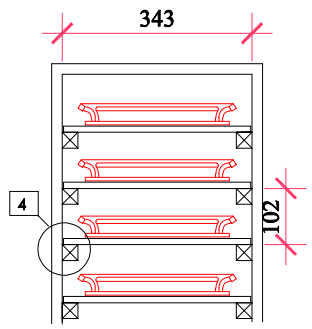

Elevation

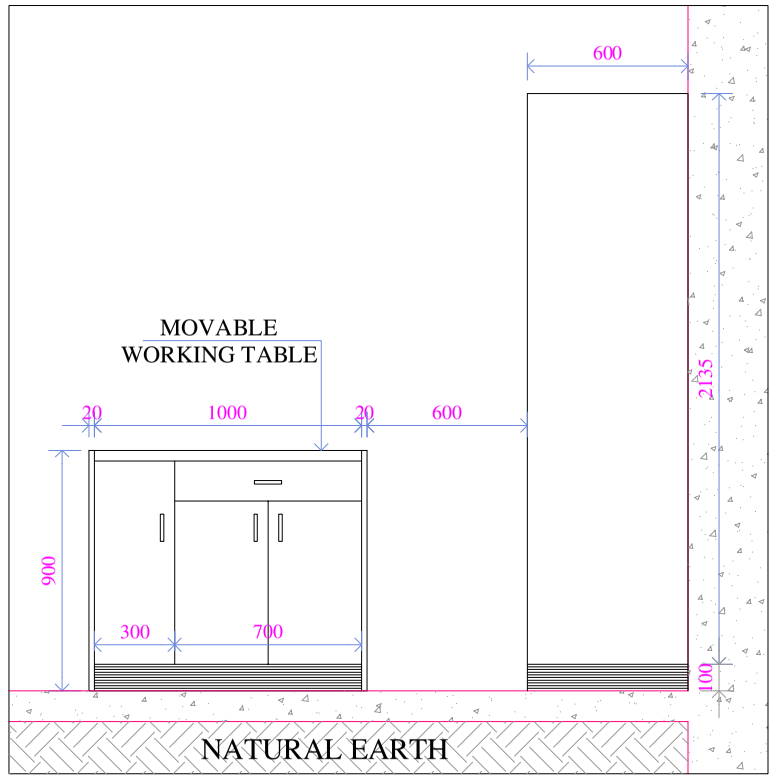

FURNITURE ELEVATION 'B'

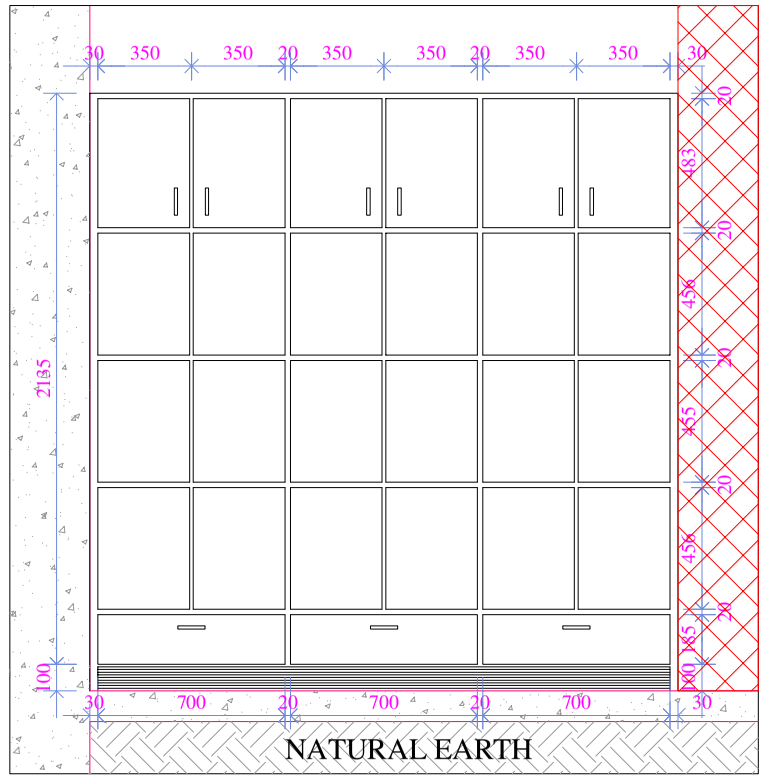

FURNITURE ELEVATION 'C'

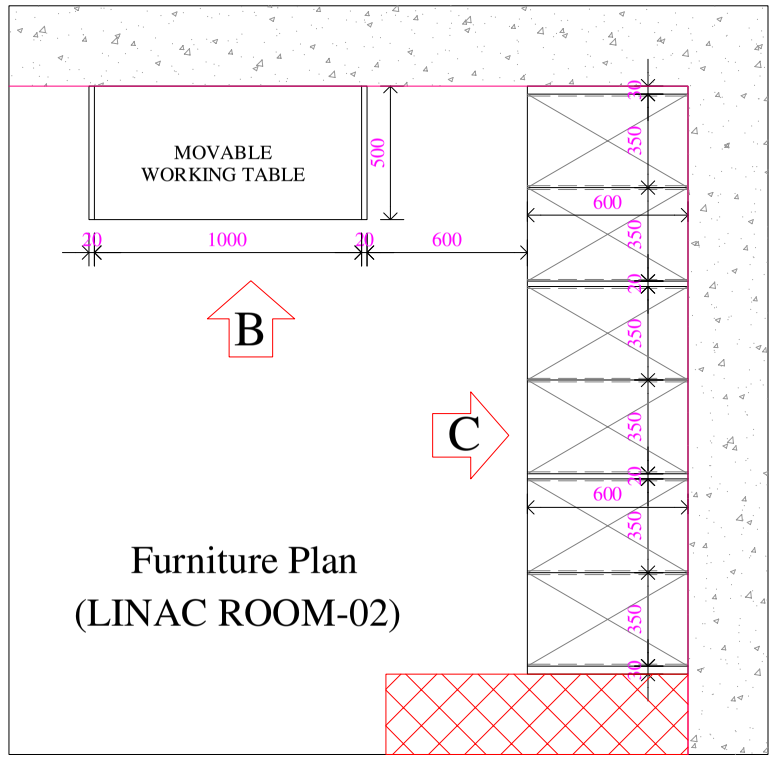

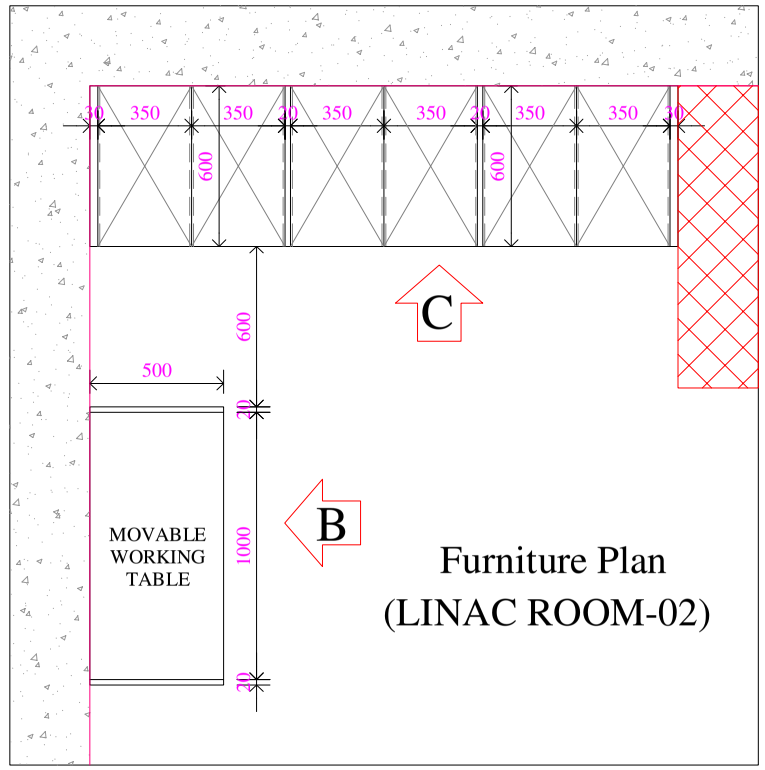

NOTE :- All Dimension's are in Millimeters
Unless Specified.

PROJECT :- PROPOSED LAYOUT FOR
15MV LINEAR ACCELERATOR OF
MAHAVIR CANCER SANSTHAN AT
PHULWARI SHARIF PATNA - 801505

Scale:	LINAC ROOM FURNITURE PLAN & DETAILS.	DRAWN BY :- R.W.
Date: 10.08.2026		CHECKED BY :- S.D.

varian
A Siemens Healthineers Company

Siemens Healthcare Pvt.Ltd.
Unit No. 9A, 9th Floor, North Tower, Godrej One, pirojshanagar, Eastern Express Highway, Vikhroli East, Mumbai - 400079. India.

6,10,15MV,6FFF,10FFF.
TRUBEAM SVC WITH FFF
LINEAR ACCELERATOR
ROOM-02.

Revisions	Date	Name
...	...	...
...	...	...
...	...	...
...	...	...

Project No: ... ...

R0

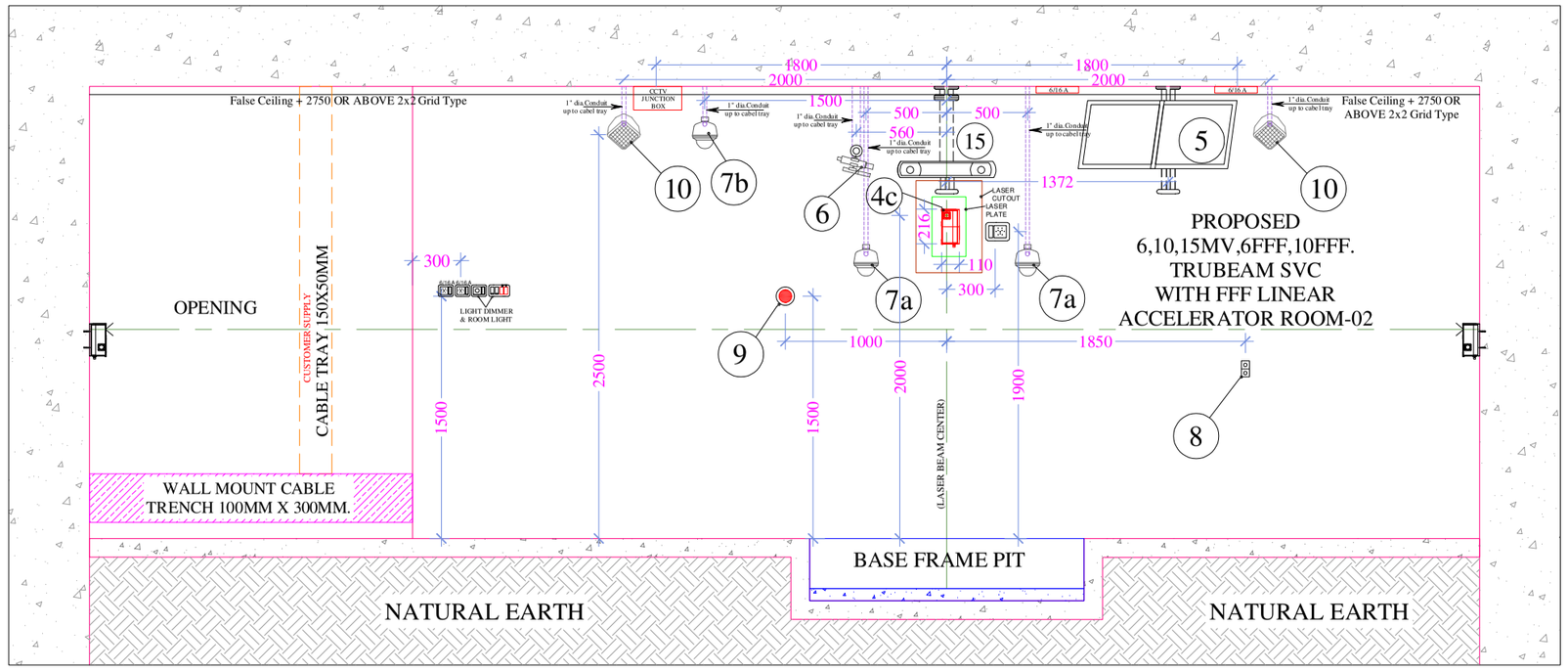

ELEVATION - 1

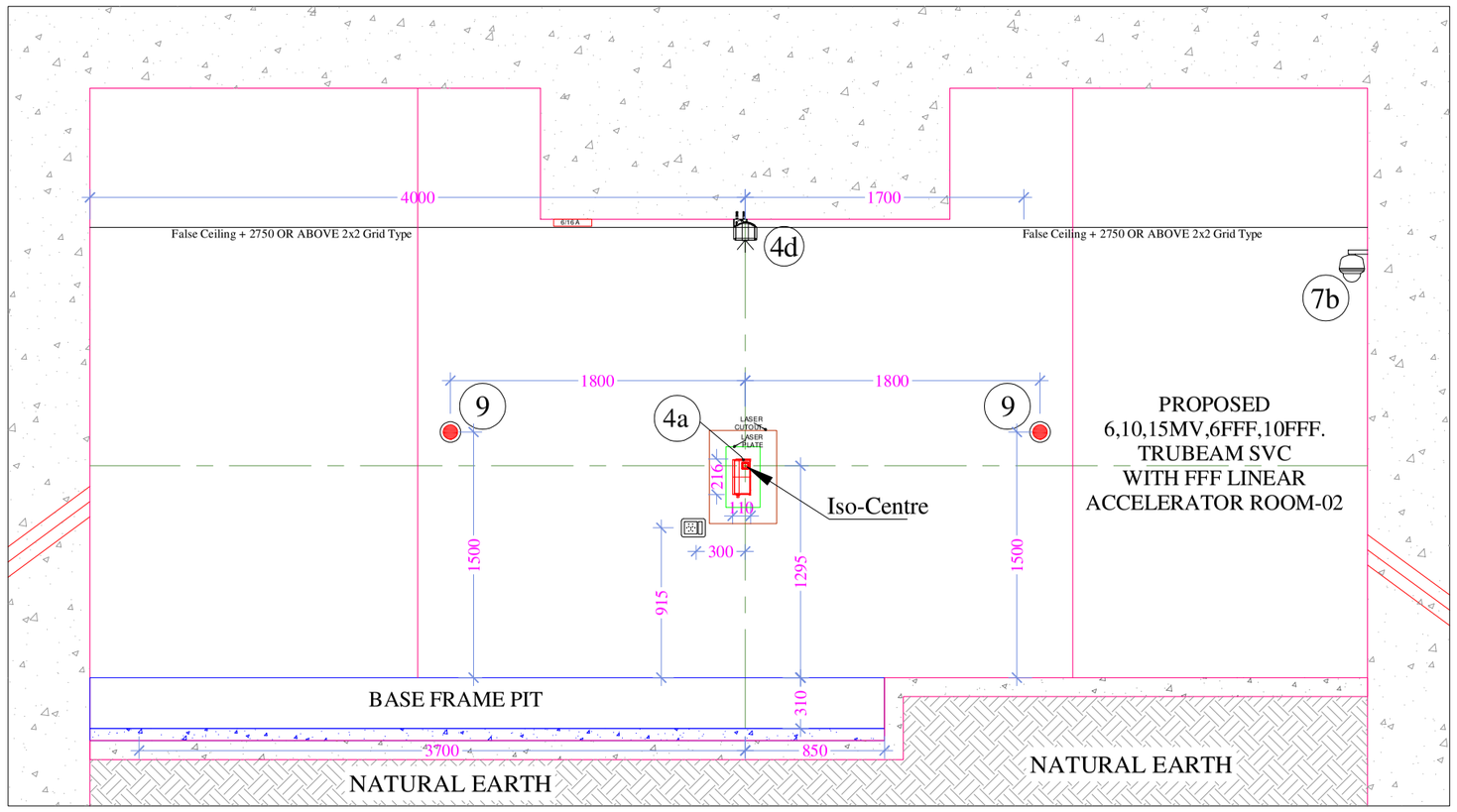

ELEVATION - 2

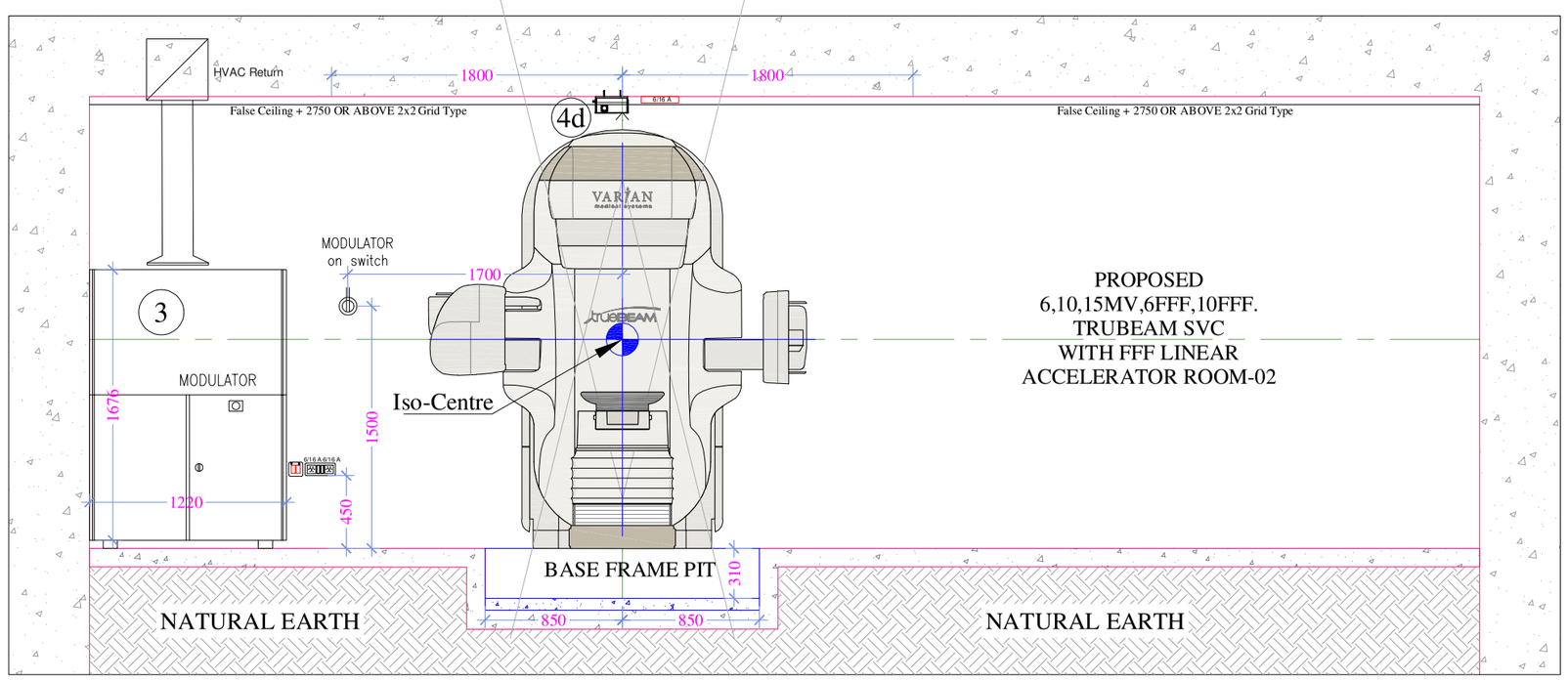

ELEVATION - 3

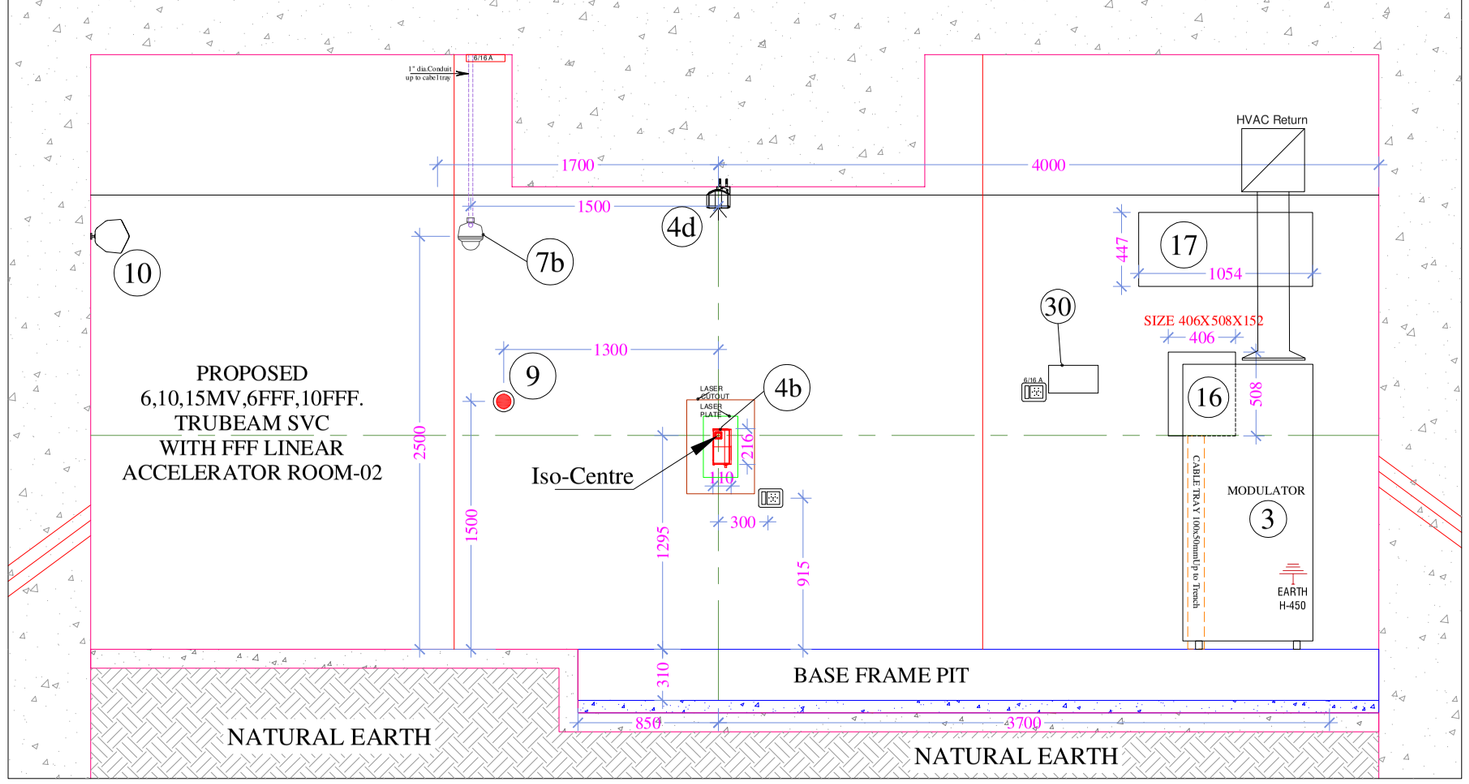

ELEVATION - 4

* NOTE - FALSE CEILING HEIGHT AS PER SITE CONDITION DISCUSS WITH PROJECT MANAGER.

NOTE :- All Dimension's are in Millimeters Unless Specified.

PROJECT :- PROPOSED LAYOUT FOR 15MV LINEAR ACCELERATOR OF MAHAVIR CANCER SANSTHAN AT PHULWARI SHARIF PATNA - 801505

Scale:	LINAC ROOM WALL ELEVATION DETAILS.	DRAWN BY :- R.W.
Date: 10.08.2026		CHECKED BY :- S.D.
varian A Siemens Healthineers Company	6,10,15MV,6FFF,10FFF. TRUBEAM SVC WITH FFF LINEAR ACCELERATOR ROOM-02.	R0

Siemens Healthcare Pvt.Ltd.
Unit No. 9A, 9th Floor, North Tower, Godrej One, pirojshanagar, Eastern Express Highway, Vikhroli East, Mumbai - 400079. India.

Revisions	Date	Name
...	...	...
...	...	...
...	...	...
...	...	...

Project No:

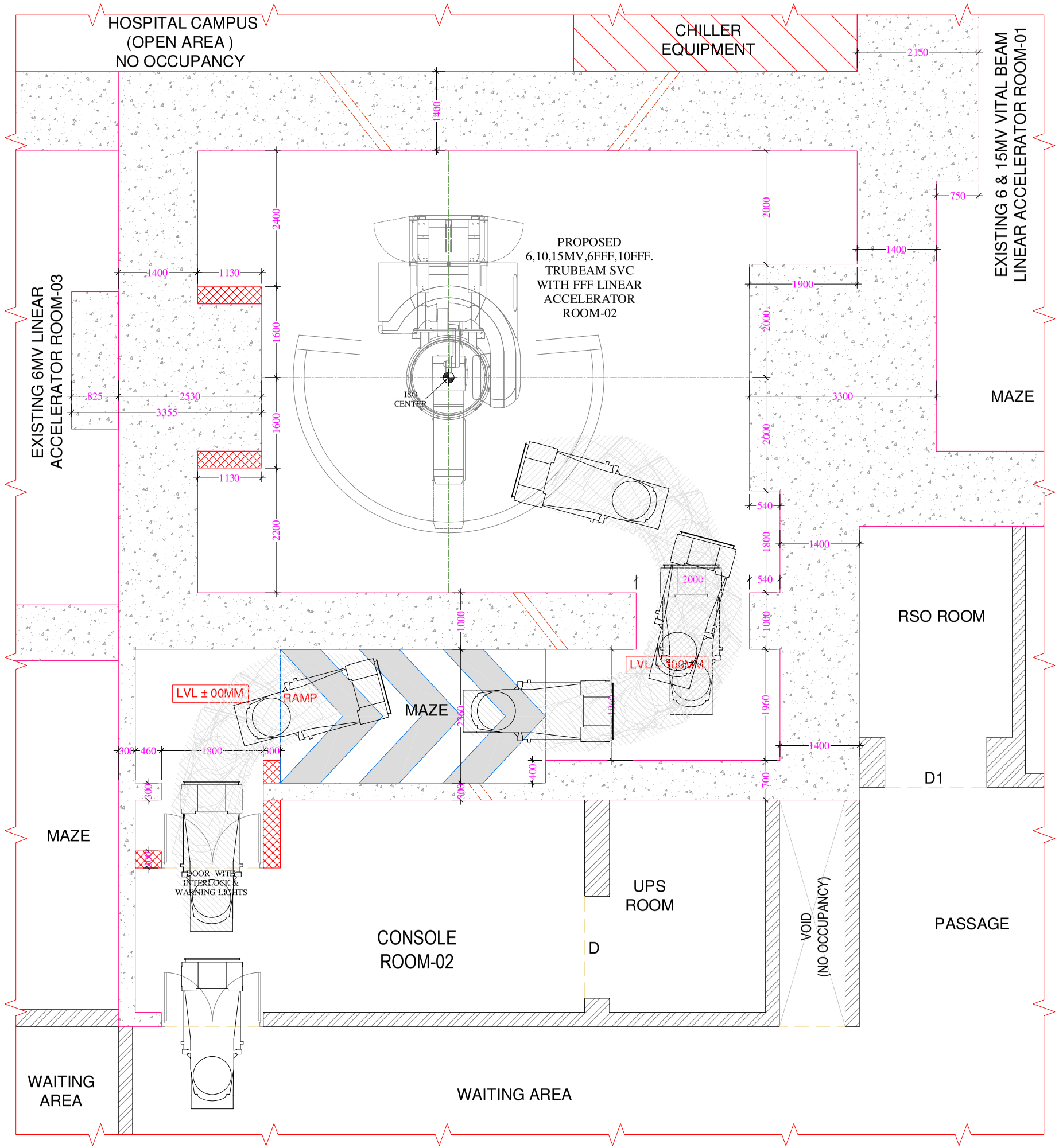

RIGGING LAYOUT PLAN

RIGGING PLAN

NOTES :-

- ENTIRE RIGGING PATH HAS TO BE 2.00 mtr WIDE & 2.20 mtr HIGH. SHOULD BE CAPABLE OF TAKING LOAD UPTO 6.00 M.T.

NOTE :- All Dimension's are in Millimeters Unless Specified.

PROJECT :- PROPOSED LAYOUT FOR 15MV LINEAR ACCELERATOR OF MAHAVIR CANCER SANSTHAN AT PHULWARI SHARIF PATNA - 801505

Scale:	RIGGING LAYOUT PLAN & DETAILS.	DRAWN BY :- R.W.
Date: 10.08.2026		CHECKED BY :- S.D.

varian
A Siemens Healthineers Company
Siemens Healthcare Pvt.Ltd.
Unit No. 9A, 9th Floor, North Tower, Godrej One, pirojshanagar, Eastern Express Highway, Vikhroli East, Mumbai - 400079. India.

6,10,15MV,6FFF, 10FFF. TRUBEAM SVC WITH FFF LINEAR ACCELERATOR ROOM-02.

Revisions	Date	Name
...	...	...
...	...	...
...	...	...
Project No: ...	...	...

R0

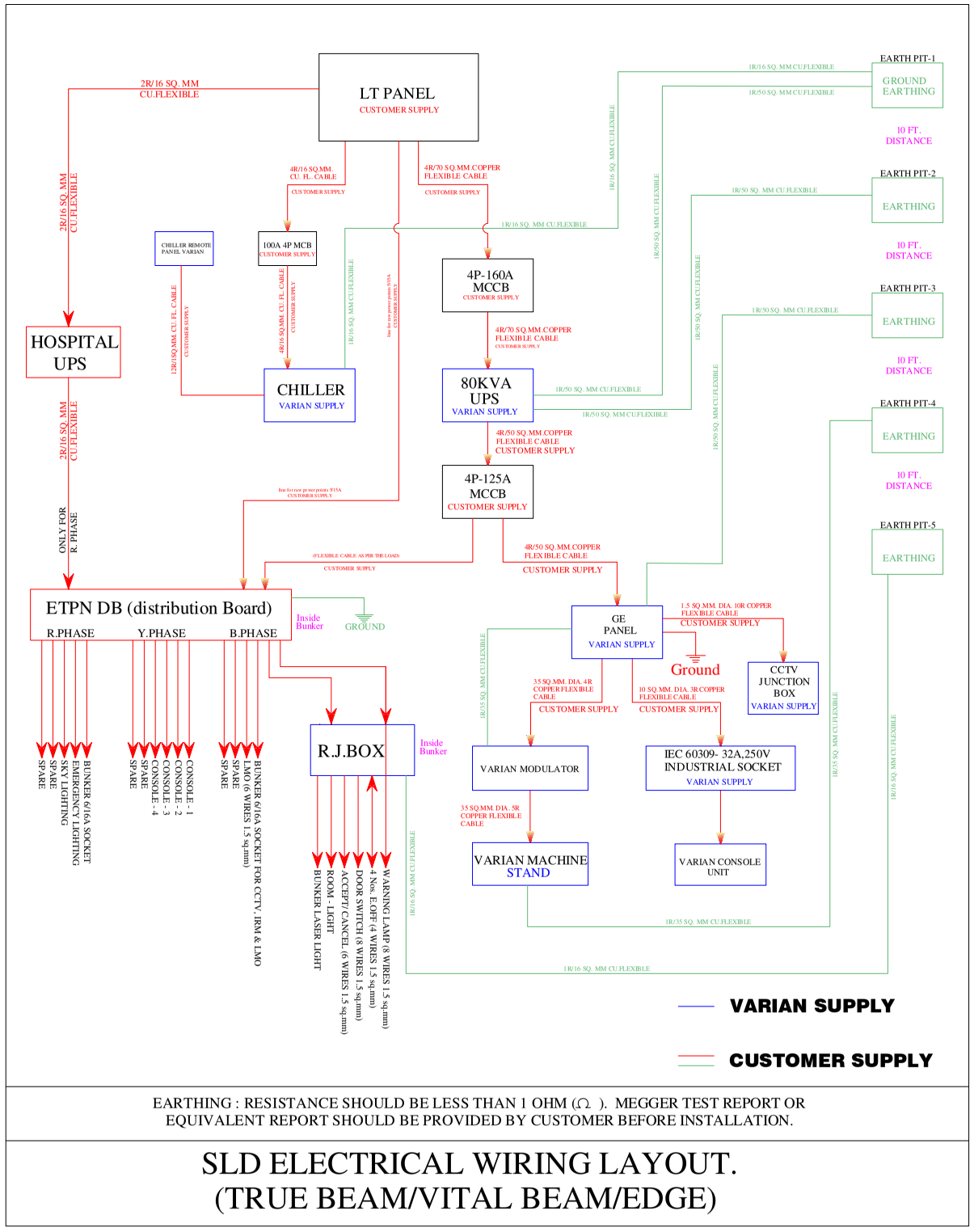

EARTHING : RESISTANCE SHOULD BE LESS THAN 1 OHM (Ω). MEGGER TEST REPORT OR EQUIVALENT REPORT SHOULD BE PROVIDED BY CUSTOMER BEFORE INSTALLATION.

SLD ELECTRICAL WIRING LAYOUT. (TRUE BEAM/VITAL BEAM/EDGE)

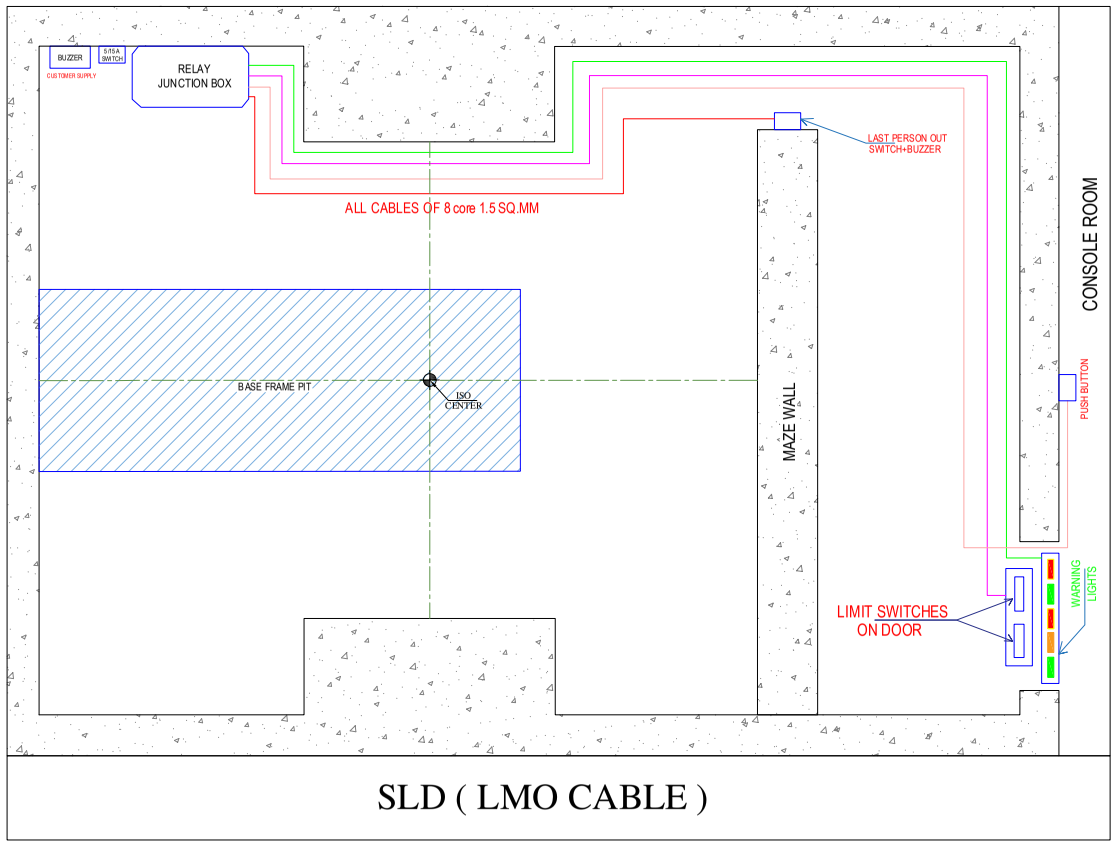

SLD (LMO CABLE)

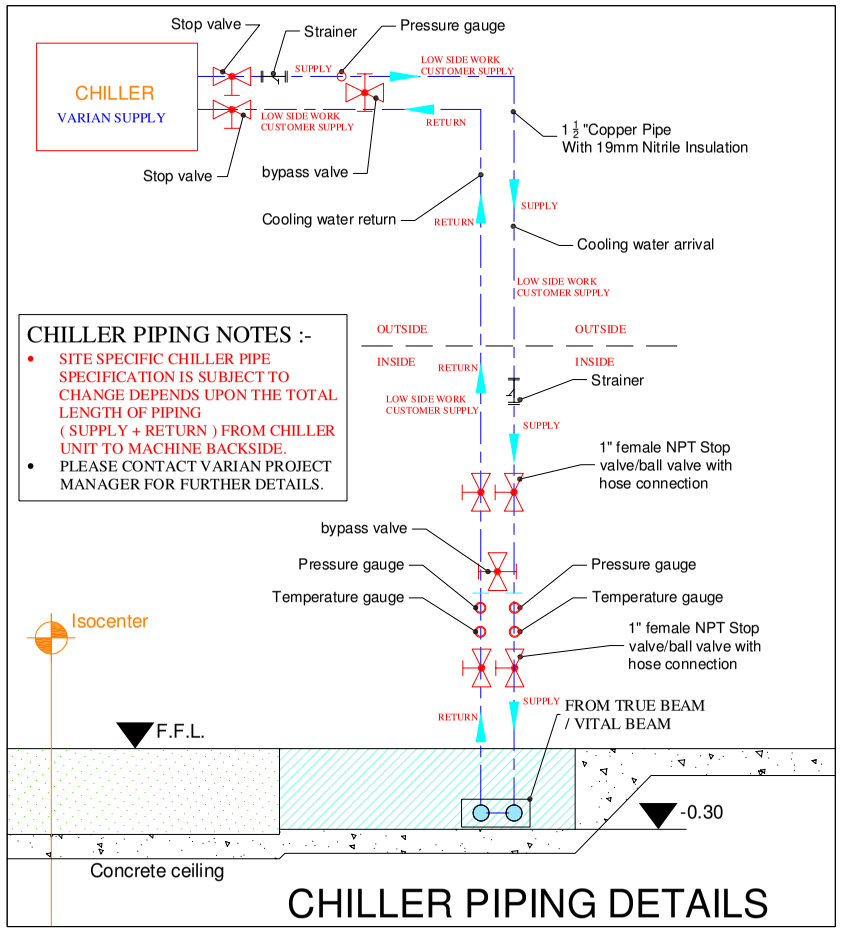

CHILLER PIPING NOTES :-

- SITE SPECIFIC CHILLER PIPE SPECIFICATION IS SUBJECT TO CHANGE DEPENDS UPON THE TOTAL LENGTH OF PIPING (SUPPLY + RETURN) FROM CHILLER UNIT TO MACHINE BACKSIDE.
- PLEASE CONTACT VARIAN PROJECT MANAGER FOR FURTHER DETAILS.

CHILLER PIPING DETAILS

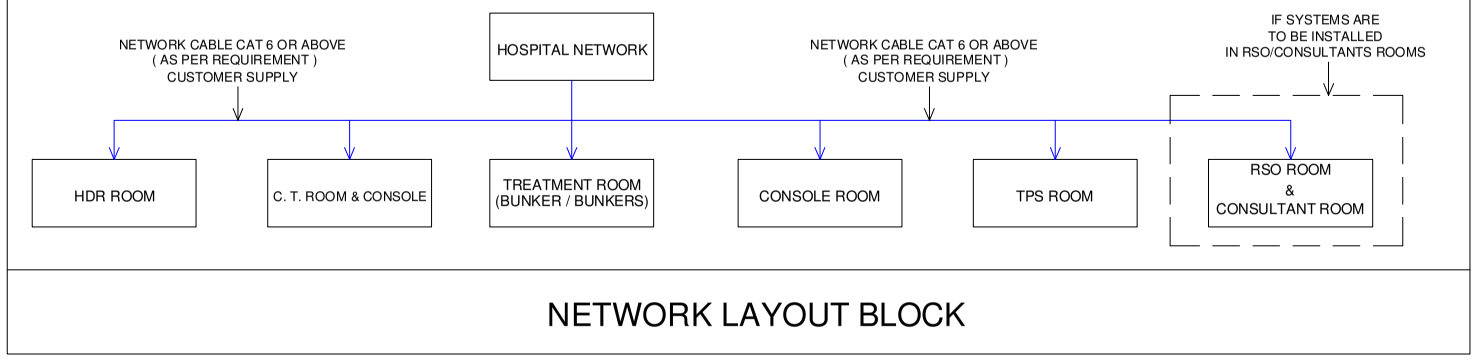

NETWORK LAYOUT BLOCK

NOTE :- All Dimension's are in Millimeters Unless Specified.

PROJECT :- PROPOSED LAYOUT FOR 15MV LINEAR ACCELERATOR OF MAHAVIR CANCER SANSTHAN AT PHULWARI SHARIF PATNA - 801505

Scale:	SLD, CHILLER PIPING DETAILS & NETWORK BLOCK & LMO CABLE SLD.	DRAWN BY :- R.W.
Date: 10.08.2026		CHECKED BY :- S.D.

varian
A Siemens Healthineers Company
Siemens Healthcare Pvt.Ltd.
Unit No. 9A, 9th Floor, North Tower, Godrej One, pirojshanagar, Eastern Express Highway, Vikhroli East, Mumbai - 400079. India.

6,10,15MV,6FFF,10FFF. TRUBEAM SVC WITH FFF LINEAR ACCELERATOR ROOM-02.

Revisions	Date	Name
...	...	...
...	...	...
...	...	...
...	...	...

Project No: ...

R0